Town Standards
Index
(select to view)

• 32' Curb & Gutter Street Section - Standard #3.00A

• 29' Curb & Gutter Street Section - Standard #3.00B

• Local Street Cross Section - Standard #3.01

• Utility Trench Pavement Repair - Standard #3.02

• Typical Pavement Repair - Standard #3.03

• Standard Driveway Turnout - Standard #3.12

• Standard Curb & Gutter - Standard #3.13

• Median Curb - Standard #3.14

• Roll Curb - Standard #3.15

• Standard Concrete Drop Inlet - Standard #4.10

• Standard Brick Drop Inlet - Standard #4.11

• Standard Drop Inlet Grates - Standard #4.12

• Standard Concrete Catch Basin - Standard #4.13A

• Standard Concrete Catch Basin - Standard #4.13B

• Standard Brick Catch Basin - Standard #4.14A

• Standard Brick Catch Basin - Standard #4.14B

• HDPE Pipe - Standard #4.16

• 2012 NCDOT Curb Ramp Standard Drawings

All construction on Town of Garner streets or in Town right of way shall comply with the current edition of the North Carolina Department of Transportation Standard Specifications for Roads and Structures

NOTES:

1) COLLECTOR STREET SHALL BE IN 60' R/W
2) GRADES SHALL NOT EXCEED 10%.
3) NORMAL CROWN OF 1/4" PER FOOT UNLESS OTHERWISE DIRECTED BY TOWN ENGINEER.

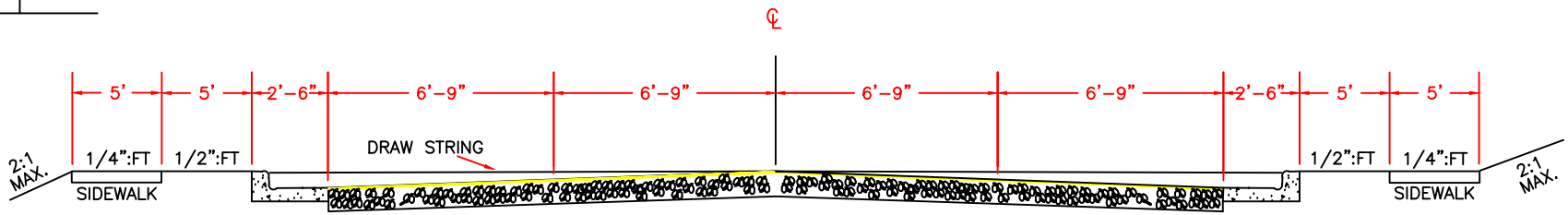

PAVEMENT DESIGN

COLLECTOR STREET 8" – ABC, 2" – SF9.5A

TOP OF PAVEMENT-------- 5" ---------- 3 5/16" -------- 1 5/8" -------- 3 5/16" ---------- 5"
TOP OF STONE---------- 7" ---------- 5 5/16" -------- 3 5/8" -------- 5 5/16" ---------- 7"
SUBGRADE---------- 15" ---------- 13 5/16" -------- 11 5/8" -------- 13 5/16" ---------- 15"

INDUSTRIAL USES 8"–ABC, 2" – H, 2" – SF9.5A

TOP OF PAVEMENT-------- 5" ---------- 3 5/16" -------- 1 5/8" -------- 3 5/16" ---------- 5"
TOP OF BINDER---------- 7" ---------- 5 5/16" -------- 3 5/8" -------- 5 5/16" ---------- 7"
TOP OF STONE---------- 9" ---------- 7 5/16" -------- 5 5/8" -------- 7 5/16" ---------- 9"
SUBGRADE---------- 17" ---------- 15 5/16" -------- 13 5/8" -------- 15 5/16" ---------- 17"

MEASUREMENTS ABOVE ARE TAKEN WHEN DRAWSTRING PULLED ACROSS TOP OF CURB & GUTTER.

NO.	DATE	DESCRIPTION
	10/2004	STREET WIDTH CHANGE

REVISIONS

32' CURB & GUTTER STREET SECTION

TOWN OF GARNER, N.C.

DRAWN BY:
DESIGNED BY:
DATE APPROVED:
APPROVED BY:
REV. NO.
STD. NO. 3.00A

NOTES:

1) LOCAL STREET SHALL BE IN 55' R/W
2) GRADES SHALL NOT EXCEED 10%.
3) NORMAL CROWN OF 1/4" PER FOOT UNLESS OTHERWISE DIRECTED BY TOWN ENGINEER.

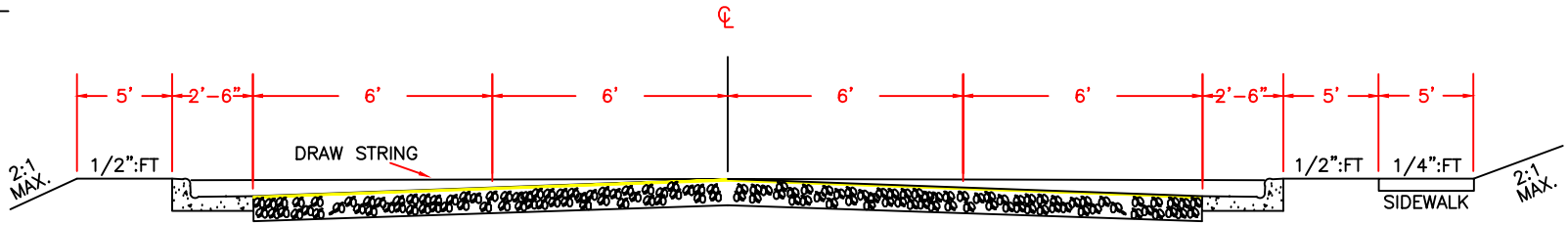

PAVEMENT DESIGN

LOCAL STREET 8" – ABC, 1.5" – SF9.5A

TOP OF PAVEMENT-------- 5" ---------- 3 1/2" ---------- 2" --------- 3 1/2" ---------- 5"
TOP OF STONE---------- 6 1/2" ---------- 5" ---------- 3 1/2" ---------- 5" ---------- 6 1/2"
SUBGRADE---------- 14 1/2" --------- 13" --------- 11 1/2" --------- 13" ---------- 14 1/2"

INDUSTRIAL USES 8" – ABC, 2" – H, 2" – SF9.5A

TOP OF PAVEMENT-------- 5" ---------- 3 1/2" ---------- 2" --------- 3 1/2" ---------- 5"
TOP OF BINDER---------- 7" ---------- 5 1/2" ---------- 4" --------- 5 1/2" ---------- 7"
TOP OF STONE---------- 9" ---------- 7 1/2" ---------- 6" --------- 7 1/2" ---------- 9"
SUBGRADE---------- 17" ---------- 15 1/2" --------- 14" --------- 15 1/2" ---------- 17"

MEASUREMENTS ABOVE ARE TAKEN WHEN DRAWSTRING PULLED ACROSS TOP OF CURB & GUTTER.

NO.	DATE	DESCRIPTION
	10/2004	STREET WIDTH CHANGE

REVISIONS

TOWN OF GARNER, N.C.

29' CURB & GUTTER STREET SECTION

DRAWN BY:
DESIGNED BY:
DATE APPROVED:
APPROVED BY:
REV. NO.
STD. NO. 3.00B

TOWN OF GARNER, N.C.

LOCAL STREET CROSS SECTION

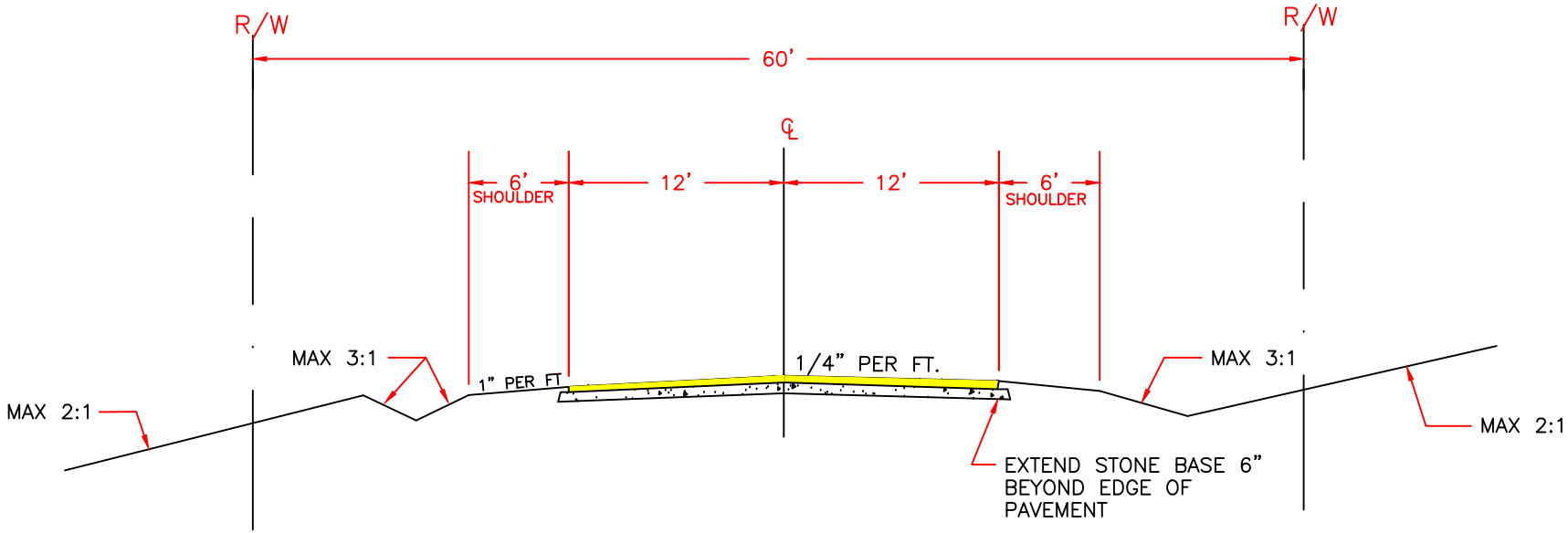

NOTES:
1) LOCAL STREET WITHOUT CURB & GUTTER SHALL BE IN 60' R/W.
2) GRADES SHALL NOT EXCEED 8%.
3) PAVEMENT DESIGN TO BE 8" – ABC & 1 1/2" SF9.5A.

DRAWN BY:	DESIGNED BY:
DATE APPROVED:	
APPROVED BY:	
STD. NO. 3.01	REV. NO.

NOTE: ALL VERTICAL ASPHALT SURFACES SHALL BE TACK COATED.

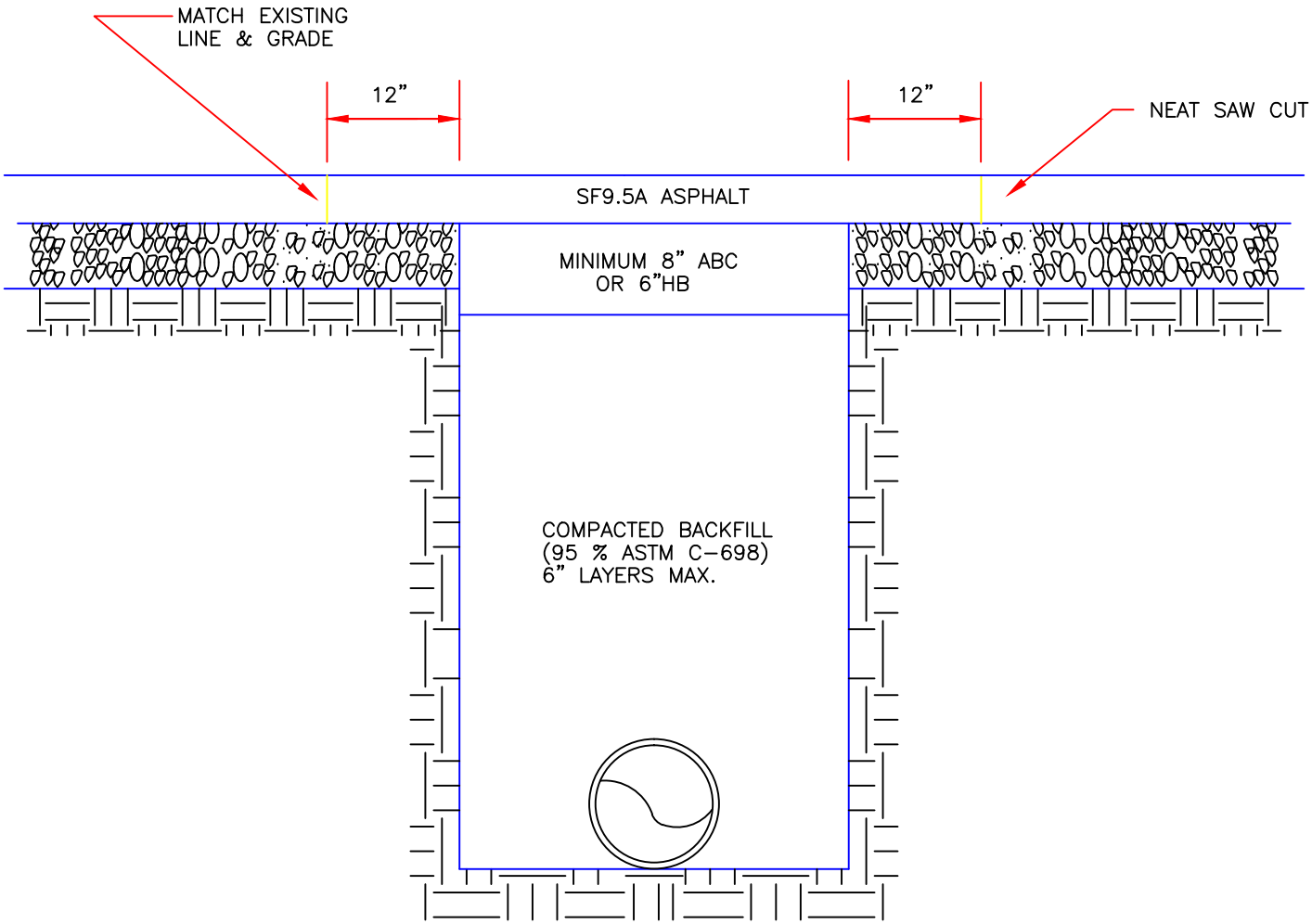

NO.	DATE	DESCRIPTION

REVISIONS

UTILITY TRENCH PAVEMENT REPAIR

TOWN OF GARNER, N.C.

DRAWN BY:

DESIGNED BY:

DATE APPROVED:

APPROVED BY:

REV. NO.

STD. NO. 3.02

NOTE: ALL VERTICAL ASPHALT SURFACES SHALL BE TACK COATED.

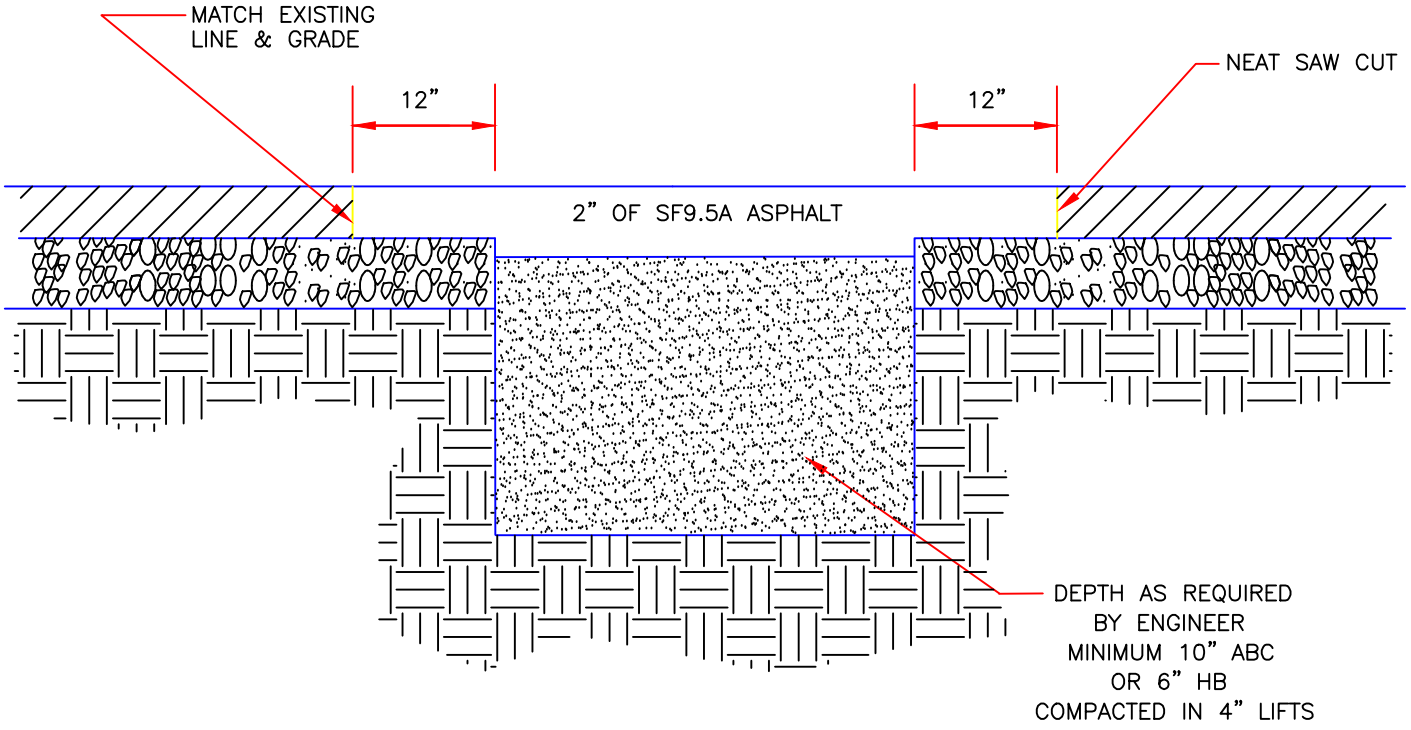

TYPICAL PAVEMENT REPAIR

TOWN OF GARNER, N.C.

DRAWN BY:

DESIGNED BY:

DATE APPROVED:

APPROVED BY:

REV. NO.

STD. NO.
3.03

NOTES:

1) RESIDENTIAL DRIVEWAY TO BE MAXIMUM 12' IN WIDTH UNLESS A VARIANCE IS GRANTED BY THE TOWN ENGINEER

2) COMMERCIAL AND INDUSTRIAL DRIVEWAYS TO BE A MAXIMUM OF 30' IN WIDTH

3) IF DISTANCE BETWEEN DRIVEWAY CUT & EXISTING CURB JOINT IS LESS THAN 5' REMOVE CURB TO EXISTING JOINT & REPLACE WITH MONOLITHIC POUR. IF DISTANCE IS GREATER THAN 5', THE EXISTING GUTTER SHALL BE SAWCUT.

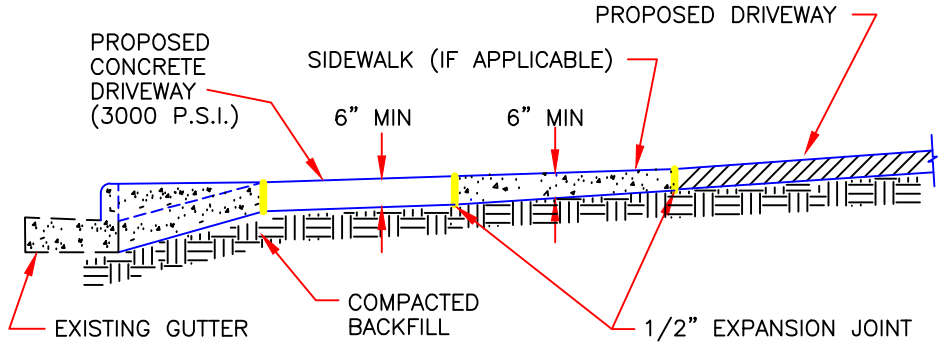

TYPICAL SECTION

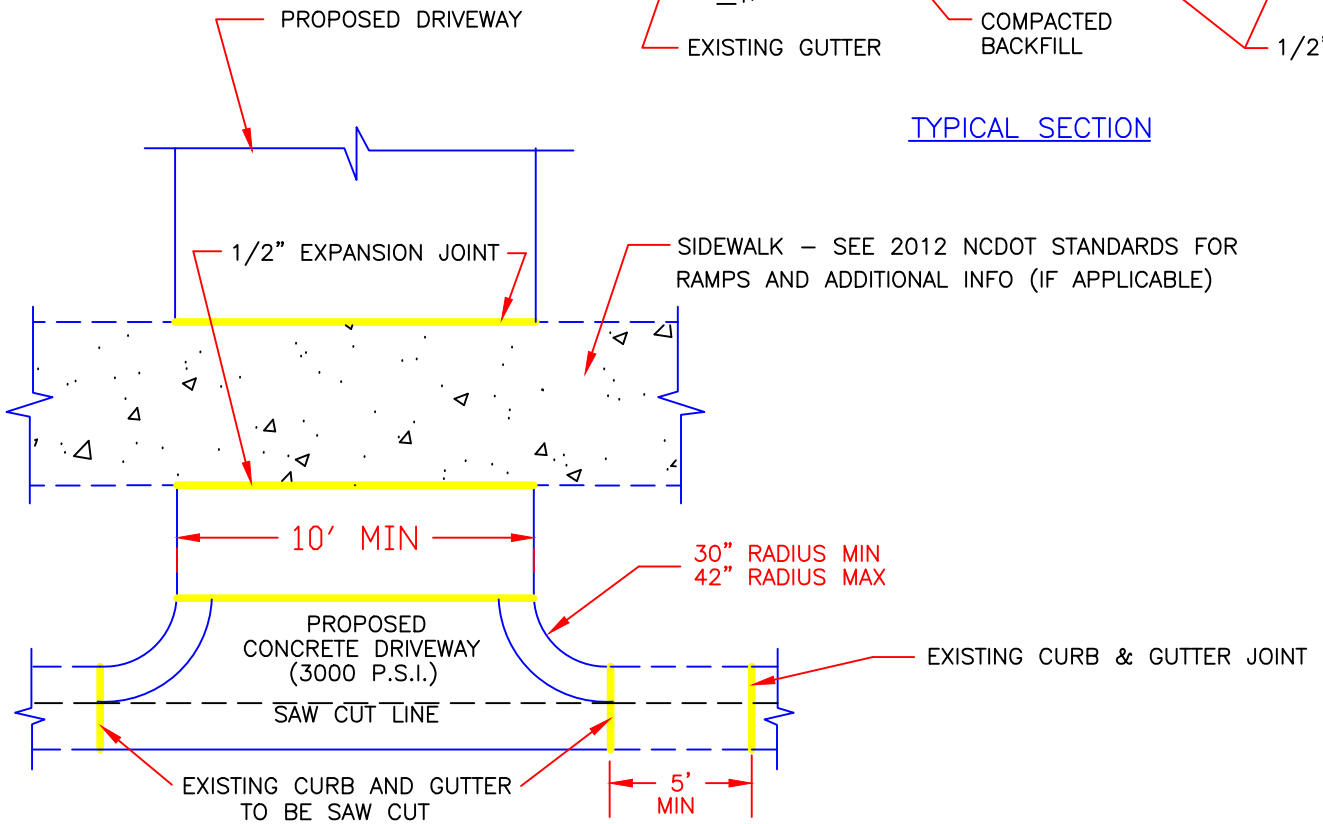

PLAN VIEW

NO.	DATE	DESCRIPTION

REVISIONS

TOWN OF GARNER, N.C.

STANDARD DRIVEWAY TURNOUT

DRAWN BY:

DESIGNED BY:

DATE APPROVED:

APPROVED BY:

STD. NO. 3.12

REV. NO.

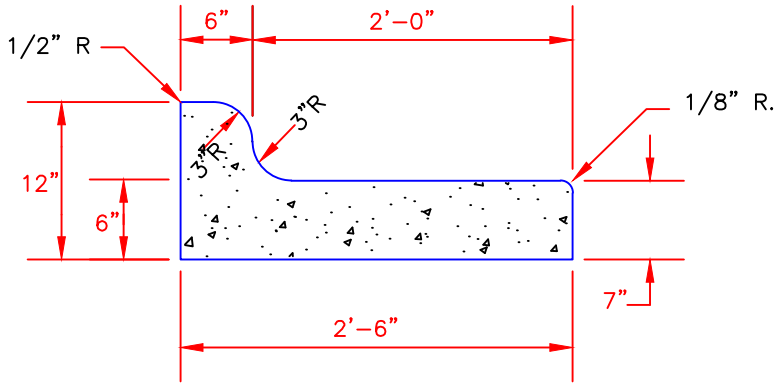

2'-6" CURB & GUTTER

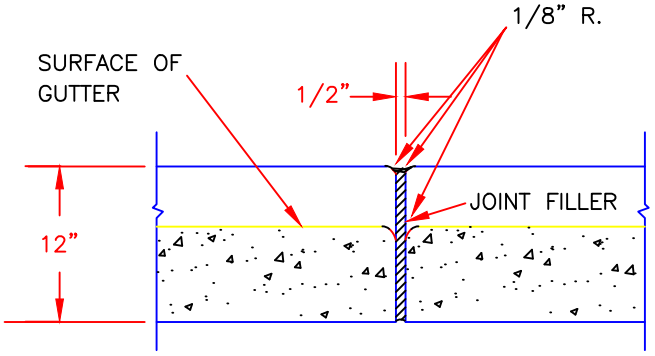

TRANSVERSE EXPANSION

JOINT IN CURB & GUTTER

NOTES:

1) CONTRACTION JOINTS SHALL BE SPACED AT 10' INTERVALS, EXCEPT THAT A 15' SPACING MAY BE USED WHEN A MACHINE IS USED OR WHEN SATISFACTORY SUPPORT FOR THE FACE FORM CAN BE OBTAINED WITHOUT THE USE OF TEMPLATES AT 10' INTERVALS. JOINT SPACING MAY BE ALTERED BY THE TOWN ENGINEER TO PREVENT UNCONTROLLED CRACKING.

2) CONTRACTION JOINTS SHALL BE INSTALLED BY THE USE OF TEMPLATES OR FORMED BY OTHER APPROVED METHODS. WHERE SUCH JOINTS ARE NOT FORMED BY TEMPLATES, A MINIMUM DEPTH OF 1.5" SHALL BE OBTAINED.

3) ALL CONTRACTION JOINTS SHALL BE FILLED WITH JOINT SEALER. EXPANSION JOINTS SHALL BE SPACED AT 90' INTERVALS AND ADJACENT TO ALL RIGID OBJECTS.

4) WHEN REPAIRING CRACKED OR DAMAGED CURB AND GUTTER, THE MINIMUM LENGTH OF SECTIONS TO BE REMOVED AND REPLACED ARE 10' FOR FORMED CURB AND 7.5' FOR MACHINE PLACED CURB. NO SAW-CUT REPAIR OF CRACKS ALLOWED.

5) MINIMUM CONCRETE STRENGTH SHALL BE 3000 PSI.

NO.	DATE	DESCRIPTION

REVISIONS

STANDARD CURB & GUTTER	DRAWN BY:	DESIGNED BY:	REV. NO.
	DATE APPROVED:		
TOWN OF GARNER, N.C.	APPROVED BY:		STD. NO. 3.13

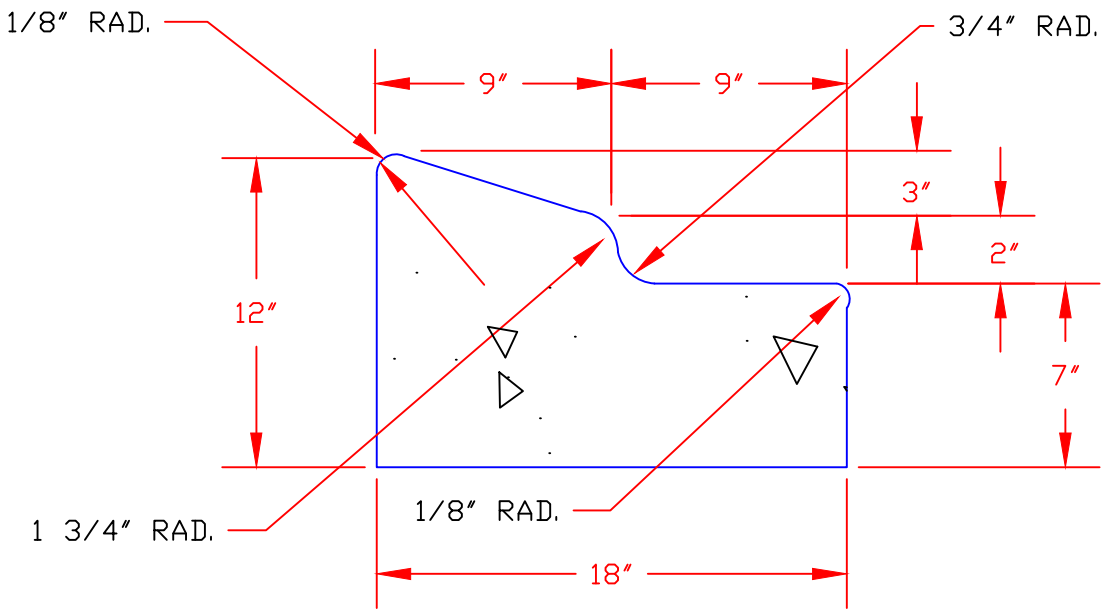

NOTES:

CONTRACTION JOINTS SHALL BE SPACED AT 10′ INTERVALS, EXCEPT THAT A 15′ SPACING MAY BE USED WHEN A MACHINE IS USED OR WHEN SATISFACTORY SUPPORT FOR THE FACE FORM CAN BE OBTAINED WITHOUT THE USE OF TEMPLATES AT 10′ INTERVALS. JOINT SPACING MAY BE ALTERED BY THE ENGINEER TO PREVENT UNCONTROLLED CRACKING.

CONTRACTION JOINTS MAY BE INSTALLED BY THE USE OF TEMPLATES OR FORMED BY OTHER APPROVED METHODS. WHERE SUCH JOINTS ARE NOT FORMED BY TEMPLATES, A MINIMUM DEPTH OF 1.5″ SHALL BE OBTAINED.

ALL CONTRACTION JOINTS SHALL BE FILLED WITH JOINT SEALER. EXPANSION JOINTS SHALL BE SPACED AT 90′ INTERVALS AND ADJACENT TO ALL RIGID OBJECTS.

MINIMUM CONCRETE STRENGTH SHALL BE 3000 PSI.

NO.	DATE	DESCRIPTION

REVISIONS

MEDIAN CURB	DRAWN BY:	DESIGNED BY:	REV. NO.
	DATE APPROVED:		
TOWN OF GARNER, N.C.	APPROVED BY:		STD. NO. 3.14

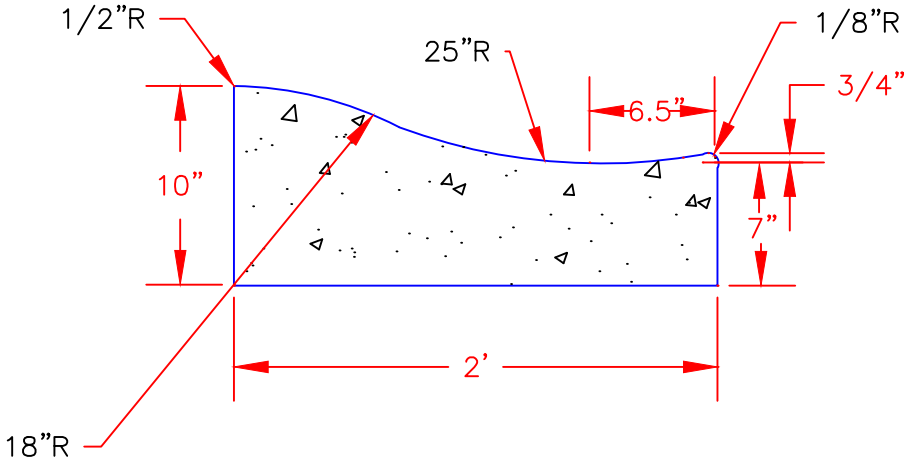

NOTES:

CONTRACTION JOINTS SHALL BE SPACED AT 10' INTERVALS, EXCEPT THAT A 15' SPACING MAY BE USED WHEN A MACHINE IS USED OR WHEN SATISFACTORY SUPPORT FOR THE FACE FORM CAN BE OBTAINED WITHOUT THE USE OF TEMPLATES AT 10' INTERVALS. JOINT SPACING MAY BE ALTERED BY THE TOWN ENGINEER TO PREVENT UNCONTROLLED CRACKING.

CONTRACTION JOINTS MAY BE INSTALLED BY THE USE OF TEMPLATES OR FORMED BY OTHER APPROVED METHODS. WHERE SUCH JOINTS ARE NOT FORMED BY TEMPLATES, A MINIMUM DEPTH OF 1.5" SHALL BE OBTAINED.

ALL CONTRACTION JOINTS SHALL BE FILLED WITH JOINT SEALER. EXPANSION JOINTS SHALL BE SPACED AT 90' INTERVALS AND ADJACENT TO ALL RIGID OBJECTS.

TRANSITION FROM 24" WIDTH ROLL CURB TO 30" STANDARD CURB AT CATCH BASINS A MINIMUM OF 5' EITHER SIDE OF CATCH BASIN. PROVIDE EXPANSION JOINT AT TRANSITION POINT. THE TRANSITION SHALL MAINTAIN THE EDGE OF THE ASPHALT WITH THE CURB AND GUTTER, WITH THE 6" SHIFT MOVING AWAY FROM THE PAVEMENT TOWARDS THE BACK OF CURB.

MINIMUM CONCRETE STRENGTH SHALL BE 3000 PSI.

NO.	DATE	DESCRIPTION
1	9/15/16	TRANSITION NOTE ADDED

REVISIONS

ROLL CURB	DRAWN BY: / DESIGNED BY:	REV. NO.
	DATE APPROVED:	
TOWN OF GARNER, N.C.	APPROVED BY:	STD. NO. 3.15

TOWN OF GARNER, N.C.

STANDARD CONCRETE DROP INLET

NO.	DATE	DESCRIPTION

REVISIONS

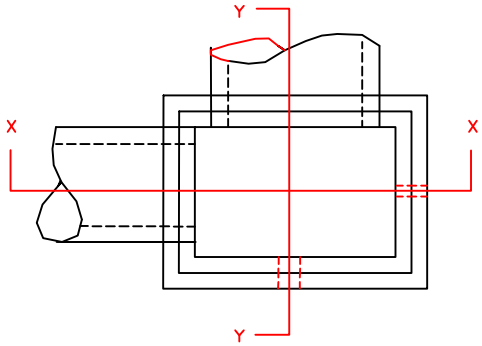

PLAN

WITH GRATE & FRAME REMOVED

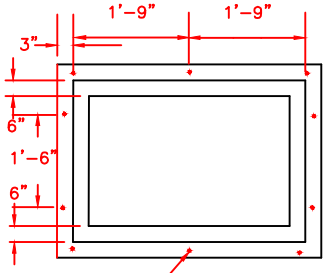

PLAN

SHOWING POSITION OF BOLTS

NOTES:

CLASS "B" CONCRETE TO BE USED THROUGHOUT.

OPTIONAL CONSTRUCTION-MONOLITHIC POUR, 2" KEYWAY, OR 4 BAR DOWELS AT 12" CENTER AS DIRECTED BY ENGINEER

TWO 2" PIPE WEEP HOLES TO BE PLACED AS DIRECTED BY ENGINEER

FORMS ARE TO BE USED FOR CONSTRUCTIN OF THE BOTTOM SLAB

A STONE DRAIN CONSISTING OF 1 CUBIC FOOT OF NO. 78M STONE CONTAINED IN A BAG OF POROUS FABRIC SHALL BE PLACED AT EACH WEEP HOLE.

ALL DROP INLETS OVER 3"-6" IN DEPTH TO BE PROVIDED WITH STEPS 1'-2" ON CENTER STEPS SHALL BE IN ACCORDANCE WITH STD. 1.02

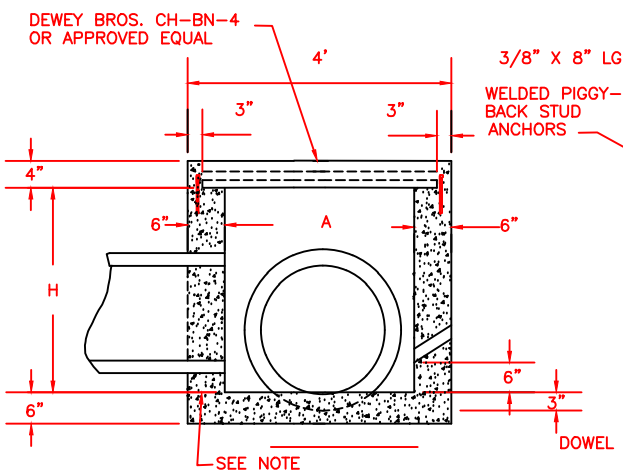

SECTION-XX

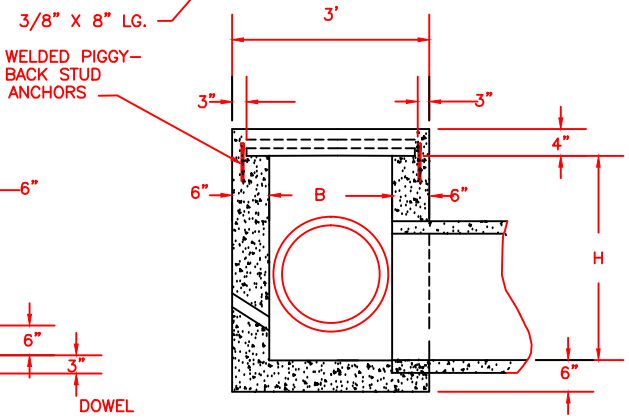

SECTION -YY

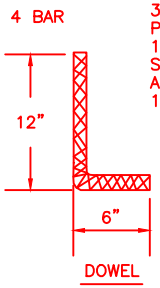

DIMENSIONS AND QUANTITIES FOR DORP INLET

PIPE	SPAN	WIDTH	HEIGHT	CUBIC YARDS IN BOX		TOTAL QUANTITIES BOX & COVER	DEDUCTIONS FOR ONE PIPE	
D	A	B	H	FLOOR & COPING	WALL/ FEET H	CUBIC YARDS MIN. H	C.M.	R.C
12"	3'	2'	2'-8"	0.262	0.222	0.855	0.015	0.024
15"			3'-8"			0.929	0.023	0.036
18"			3'-5"			1.021	0.033	0.049
24"			4'-0"			1.151	0.059	0.085
30"	3'	2'	4'-3"	0.262	0.222	1.207	0.092	0.127

DIMENSIONS FOR CHANNELS

CHANNELS

NO.	SIZE	LENGTH	TOTAL LIN FEET
2	3"X4.1"	4'-0"	8'-0"
2	3"X4.1"	2'-6"	5'-0"

DRAWN BY:

DESIGNED BY:

DATE APPROVED:

APPROVED BY:

REV. NO.

STD. NO. 4.10

TOWN OF GARNER, N.C.

STANDARD BRICK DROP INLET

NO.	DATE	DESCRIPTION

REVISIONS

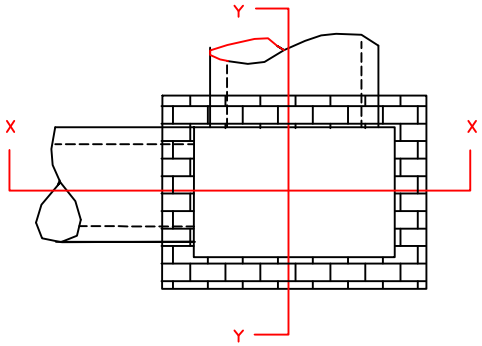

PLAN
WITH COPING REMOVED

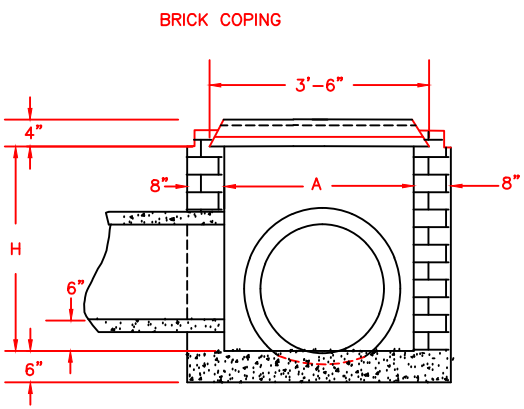

SECTION-XX

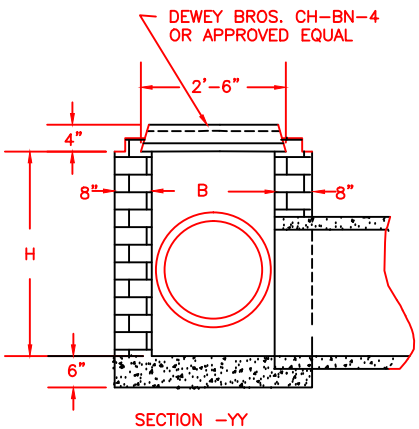

SECTION -YY

NOTES:

ALL DROP INLET OVER 3'-6" IN DEPTH TO BE PROVIDED WITH STEPS 1'-2" ON CENTERS. STEPS SHALL BE IN ACCORDANCE WITH STD. NO. 1.02

CLASS "B" CONCRETE TO BE USED.

ALL MORTAR JOINTS ARE TO BE 1/2" +- 1/8"

FORMS ARE TO BE USED FOR THE CONSTRUCTION OF THE BOTTOM SLAB

BRICK MASONRY DORP INLET NOT TO BE USED IN LOCATIONS SUBJECT TO TRAFFIC.

JUMBO BRICK WILL BE PERMITTED. CONCRETE BRICK OR 4 SOLID CONCRETE BLOCKS MAY BE USED IN LIEU OF CLAY BRICK.

FOR 8'-0" IN HEIGHT OR LESS USE 8" WALL. OVER 8'-0" IN HEIGHT, USE 12" WALL TO 6'-0" FROM TOP OF WALL. AND 8" WALL FOR THE REMAINING 6'-0". QUANTITIES TO BE ADJUSTED ACCORDINGLY.

DIMENSIONS AND QUANTITIES

DIMENSIONS OF BOX & PIPE				CONCRETE IN BASE	TOTAL BRICK MASONRY			DEDUCTINS FOR ONE PIPE	
PIPE	SPAN	WIDTH	HEIGHT		PER FT.	BRICK	MIN.		
D	A	B	H(MIN)	CU. YDS.	HEIGHT	COPING	H	C.M.	R.C
12"	3'-0"	2'-0"	2'-8"	0.267	0.313	0.037	0.871	0.020	0.032
15"			3'-0"				0.976	0.031	0.047
18"			3'-5"				1.106	0.044	0.065
24"			4'-0"				1.289	0.078	0.113
30"	3'-0"	2'-0"	4'-3"	0.267	0.313	0.037	1.367	0.122	0.170

DRAWN BY:
DESIGNED BY:
DATE APPROVED:
APPROVED BY:
REV. NO.
STD. NO. 4.11

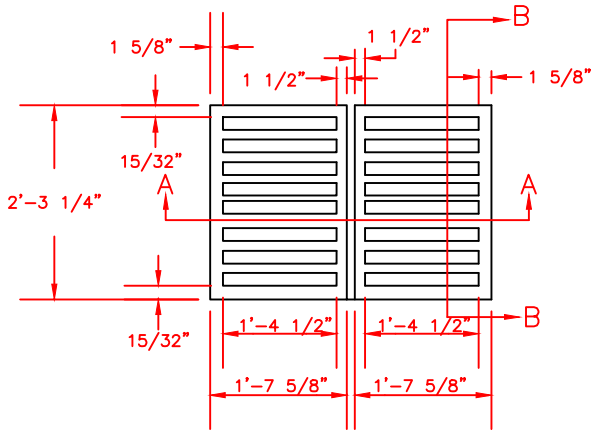

PLAN OF GRATING

DEWEY BROS. CH-BN-4 OR APPROVED EQUAL

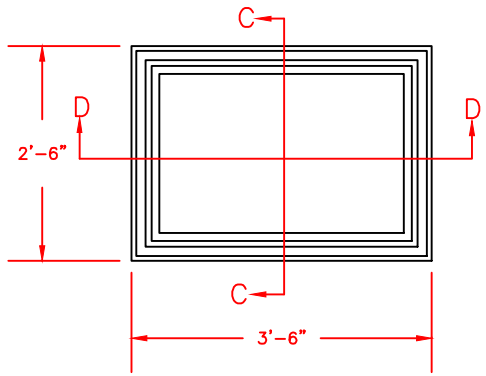

PLAN OF FRAME

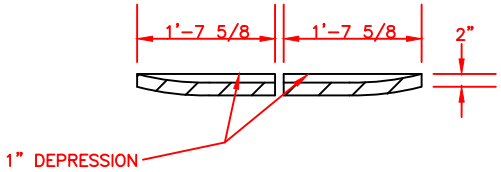

SECTION-AA

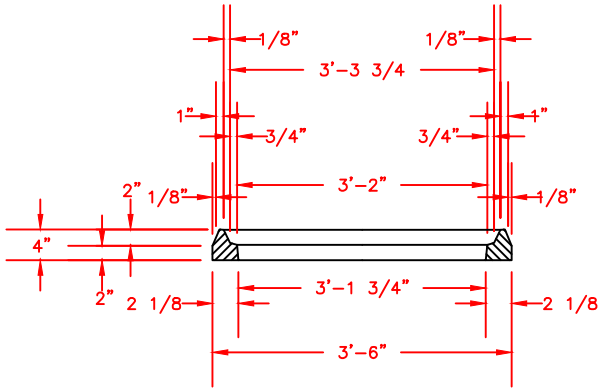

SECTION-DD

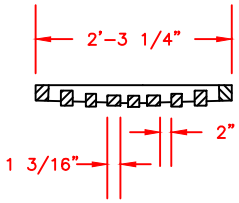

SECTION-BB

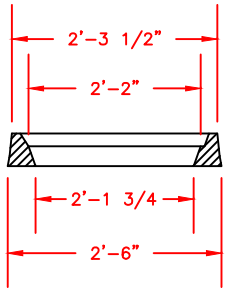

SECTION-CC

NO.	DATE	REVISIONS DESCRIPTION

TOWN OF GARNER, N.C.

STANDARD DROP INLET GRATES

DRAWN BY:

DESIGNED BY:

DATE APPROVED:

APPROVED BY:

REV. NO.

STD. NO. 4.12

TOWN OF GARNER, N.C.

STANDARD CONCRETE CATCH BASIN

NO.	DATE	DESCRIPTION

REVISIONS

NOTES:

CLASS "B" CONCRETE TO BE THROUGHOUT.

ALL CATCH BASIN OVER 3'-6" IN DEPTH TO BE PROVIDED ACCORDANCE WITH STD. NO. 1.02

OPTIONAL CONSTRUCTION-MONOLITHIC POUR. 2" KEYWAY OR 4 BAR DOWELS AT 12 CENTERS AS DIRECTED BY ENGINEERS.

FORM ARE TO BE USED FOR THE CONSTRUCTION OF THE BOTTOM SLAB

FOR 8' IN HEIGHT OR LESS USE 6" LESS USE 6" WALLS AND BOTTOM SLABS OVER 8' AND UP TO 16' IN HEIGHT USE 8' WALLS AND BOTTOM SLAB. QUANTITIES TO BE ADJUSTED ACCORDINGLY

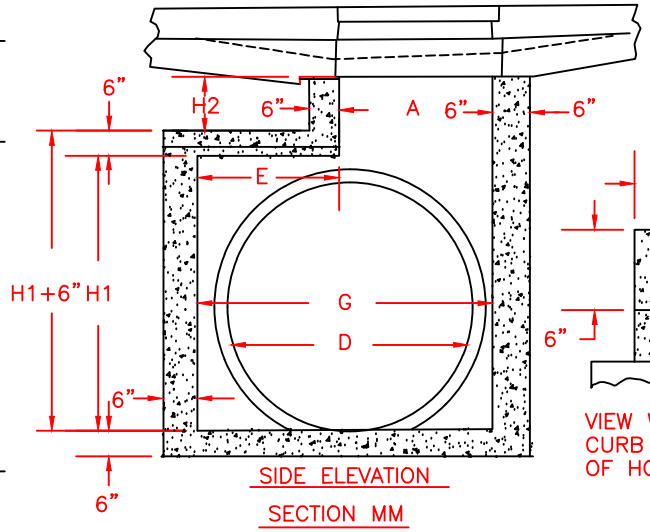

SIDE ELEVATION

SECTION MM

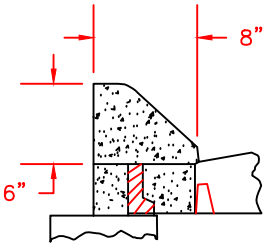

VIEW WHEN 8" X 6" CURB IS USED IN PLACED OF HOOD

STD. STEPS 102

DEWEY BROS. CH-BN-2000 OR APPROVED EQUAL

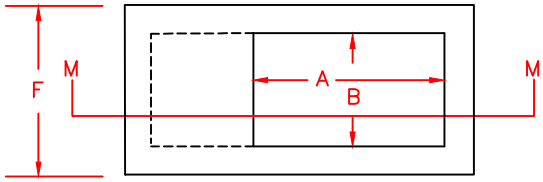

PLAN

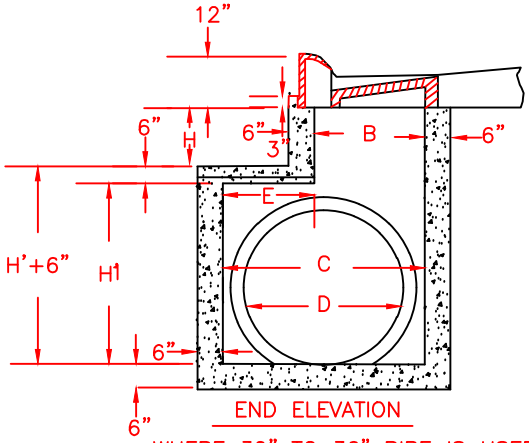

END ELEVATION

WHERE 30" TO 36" PIPE IS USED

SECTION JJ

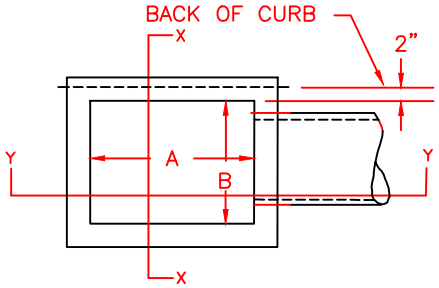

PLAN

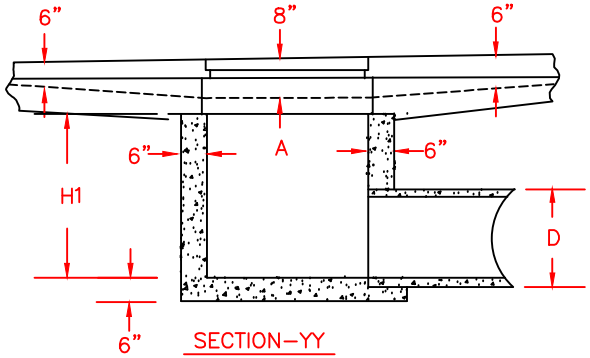

SECTION-YY

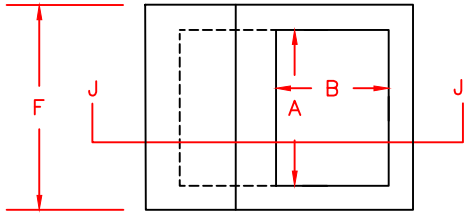

PLAN

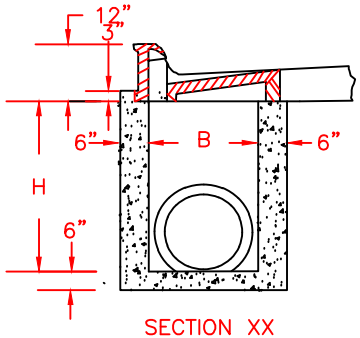

SECTION XX

DRAWN BY:

DESIGNED BY:

DATE APPROVED:

APPROVED BY:

REV. NO.

STD. NO. 4.13A

TOWN OF GARNER, N.C.

STANDARD CONCRETE CATCH BASIN

NO.	DATE	DESCRIPTION

REVISIONS

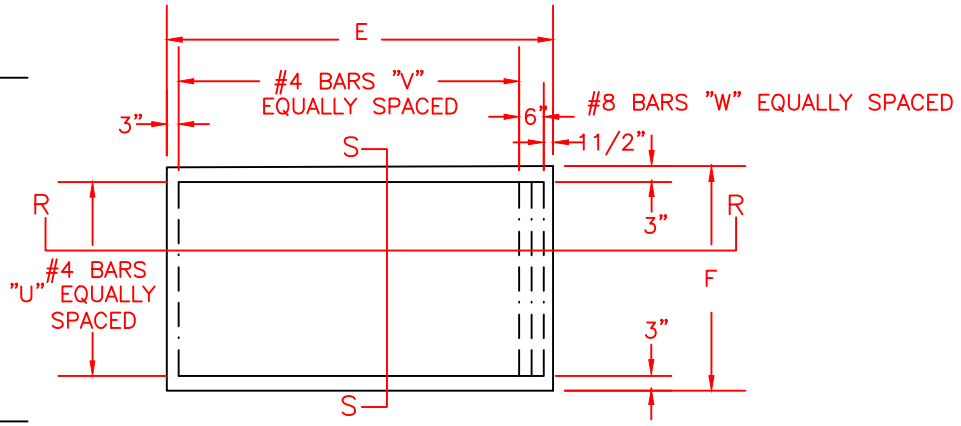

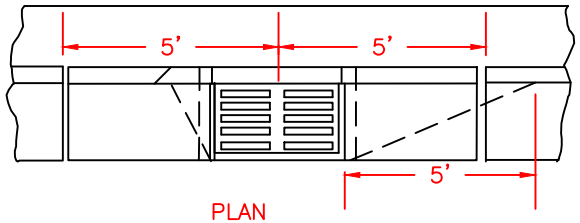

PLAN
CURB AND GUTTER
WITH CATCH BASIN ON STEEP GRADES

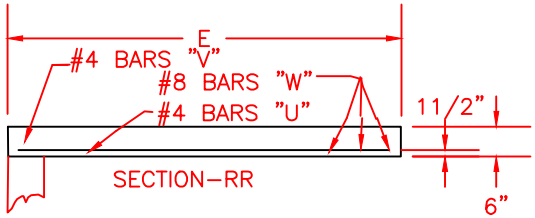

SECTION–RR

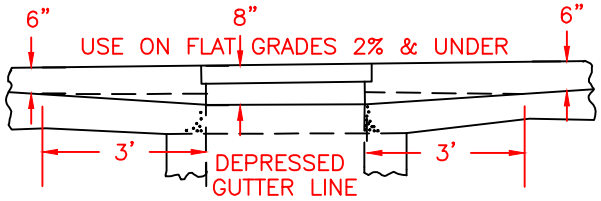

ELEVATION
NORMAL CURB & GUTTER ON LIGHT GRADES

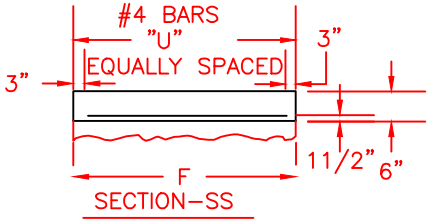

SECTION–SS

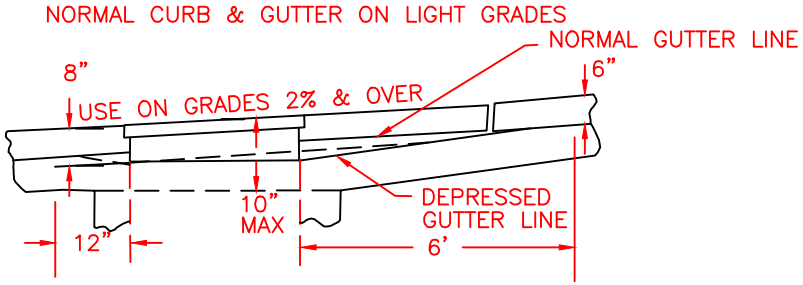

ELEVATION
NORMAL CURB & GUTTER ON STEEP GRADES

MIN. DIMENSIONS AND QUANTITIES FOR CONC. CATCH BASIN

PIPE	SPAN	WIDTH	WIDTH	SPAN	HEIGHT	HEIGHT	COVER DIMENSION		REINFORCING BARS–U		BARS–V		BARS–W		TOTAL	TOP	FLOOR	CONC IN	TOTAL	WALLS	H1 C.Y./	ADD TO	DEDUCTIONS ONE PIPE	
DIMENSIONS OF BOX & PIPE															CU.YDS. CONC. IN BOX									
D	A	B	C	G	MIN. H1	H2	E	F	NO	LENGTH	NO	LENGTH	NO	LENGTH	LBS	SLAB		WALLS	CONC.	FT. HT.	FT. HT.	FT. HT.	C.M.	R.C.
12"	3'–0"	2'–2"	–	–	2'–3"	–	–	–	–	–	–	–	–	–	–	–	0.235	0.513	0.748		0.228	–	0.015	0.032
15"	3'–0"	2'–2"			2'–6"												0.235	0.583	0.818	0.228	0.228	–	0.023	0.036
18"					2'–10"												0.235	0.659	0.894	ABOVE	0.228	–	0.033	0.049
24"					3'–4"												0.235	0.774	1.009	MIN. H1	0.228	–	0.059	0.085
30"			3'–4"		3'–2"		1'–8"	4'–0"	4	1'–5"	2	3'–9"	3	3'–9"	39	0.123	0.321	0.950	1.394		2.271	0.077	0.092	0.127
36"			3'–10"		3'–8"	VARI–	2'–2"	4'–0"	4	1'–11"	3	3'–9"	3	3'–9"	43	0.161	0.358	1.154	1.673	0.228	0.290	0.077	0.132	0.178
42"				4'–5"	4'–4"	ABLE	1'–11"	3'–2:	4	1'–8"	2	2'–11"	3	2'–11"	32	0.112	0.318	1.315	1.745	H²	0.281	0.085	0.180	0.243
48"				5'–0"	4'–10"		2'–6"	3'–2"	4	2'–3"	3	2'–11"	3	2'–11"	35	0.145	0.352	1.560	2.057		0.302	0.085	0.235	0.317
54"	3'–0"	2'–2"		5'–7"	5'–4"		3'–1"	3'–2"	4	2'–10"	5	2'–11"	3	2'–11"	41	0.180	0.386	1.826	2.392		0.324	0.085	0.297	0.401

DRAWN BY:

DESIGNED BY:

DATE APPROVED:

APPROVED BY:

REV. NO.

STD. NO. 4.13B

TOWN OF GARNER, N.C.

STANDARD BRICK CATCH BASIN

NO.	DATE	DESCRIPTION

REVISIONS

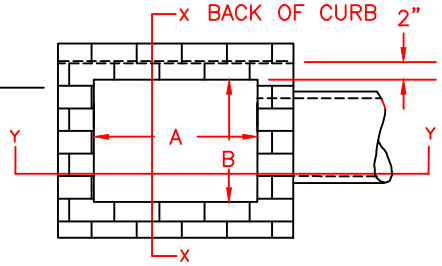

PLAN

DEWEY BROS. CH-BN-2000
OR APPROVED EQUAL

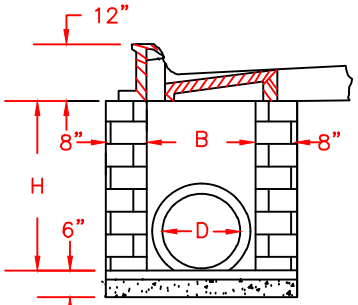

SECTION XX

NOTES:

ALL MORTAR JOINTS ARE TO BE 1/2"± 1/8" THICK CLASS "B" CONCRETE TO BE USED

FORMS ARE TO BE USED FOR THE CONSTRUCTION OF THE BOTTOM SLAB

DEDUCT FOR PIPE OR PIPES FROM TOTAL CU.YD. OF BRICK MASONRY

JUMBO BRICK WILL BE PREMITTED. CONCRETE BRICK OR 4" SOLID CONCRETE BLOCKS MAY BE USED IN LIEU OF CLAY BRICK.

ALL CATCH BASIN OVER 3'-6" IN DEPTH SHALL BE PROVIDED WITH STEPS 1'-2" ON CENTER. STEPS SHALL BE IN ACCORDANCE WITH STD. NO. 1.02

FOR OVER 8' IN HEIGHT, USE 12" WALL TO 6' FROM TOP OF WALL.

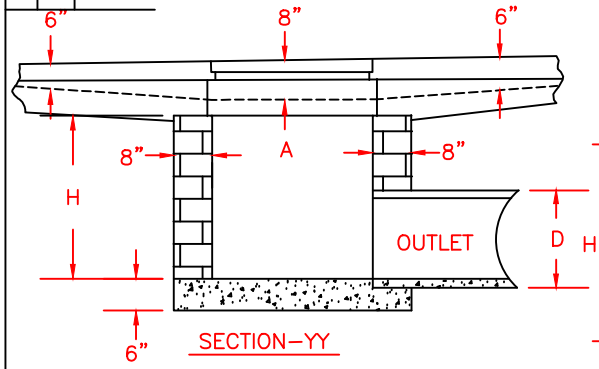

SECTION-YY

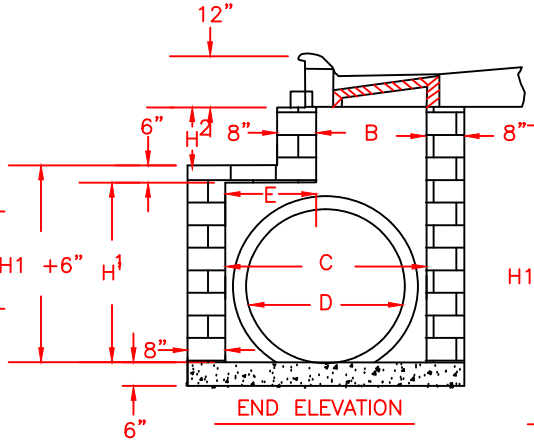

END ELEVATION

WHERE 30" TO 36" PIPE IS USED

SECTION JJ

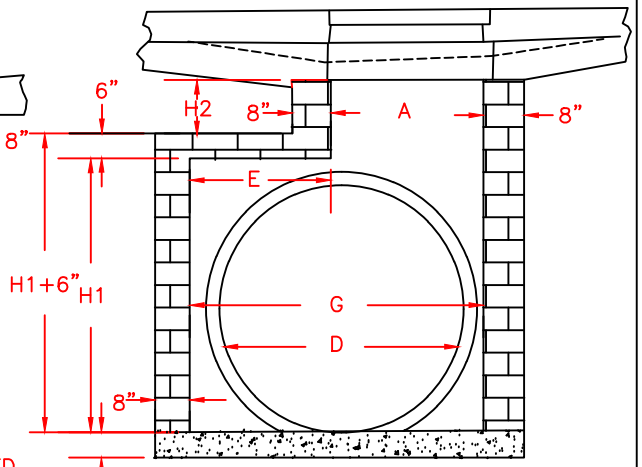

SIDE ELEVATION

WHERE 42" TO 54" PIPE IS USED

SECTION MM

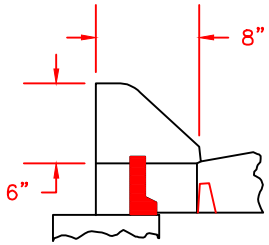

VIEW WHEN 8" X 6" CURB IS USED IN PLACED OF HOOD

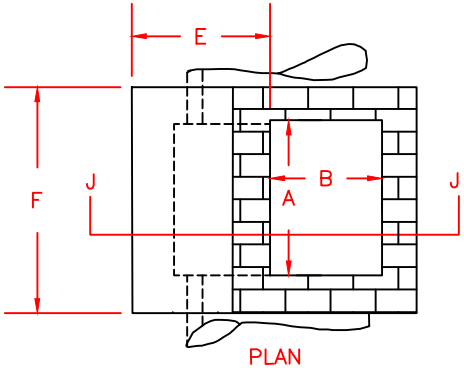

PLAN

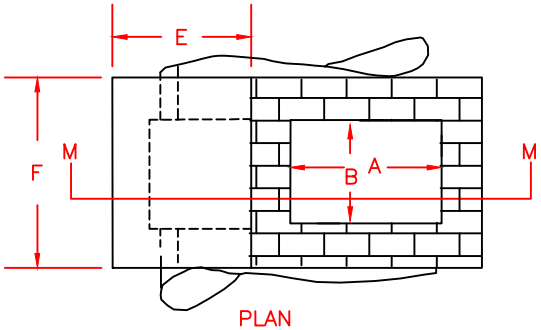

PLAN

DRAWN BY:

DESIGNED BY:

DATE APPROVED:

APPROVED BY:

REV. NO.

STD. NO. 4.14A

TOWN OF GARNER, N.C.

STANDARD BRICK CATCH BASIN

NO.	DATE	DESCRIPTION

REVISIONS

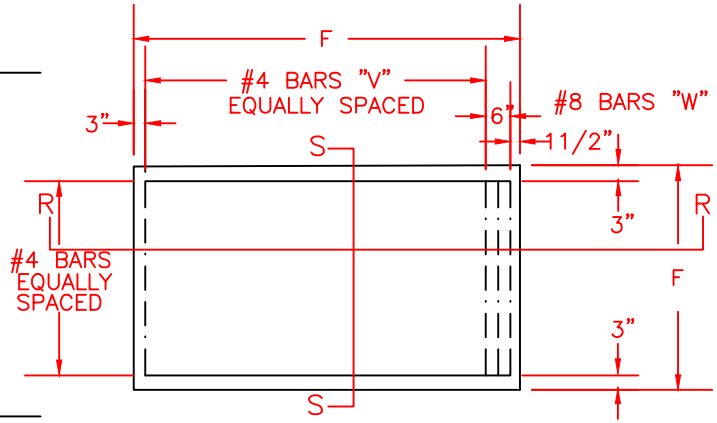

PLAN OF TOP SLAB

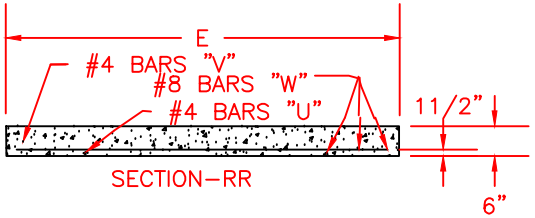

SECTION–RR

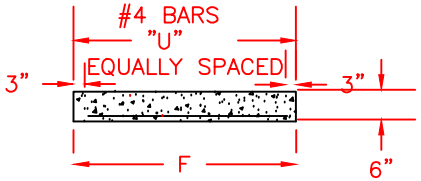

SECTION–SS

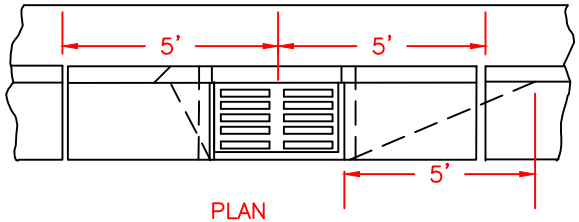

PLAN
CURB AND GUTTER
WITH CATCH BASIN ON STEEP GRADE

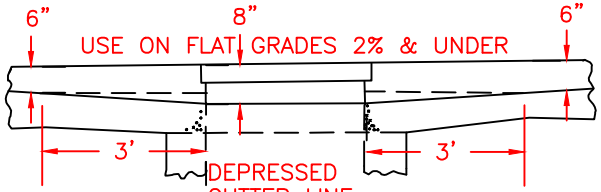

ELEVATION
NORMAL CURB & GUTTER ON LIGHT GRADES

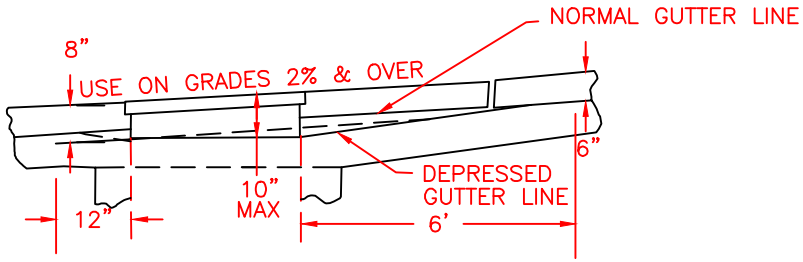

ELEVATION
NORMAL CURB & GUTTER ON STEEP GRADES

MIN.DIMENSIONS AND QUANTITIES FOR BRICK CATCH BASIN

DIMENSIONS OF BOX AND PIPE							COVER		REINFORCING								CUBIC YARDS OF CONCRETE IN BOX			BRICK MASONRY		H1	ADD	DEDUCTIONS FOR ONE PIPE	
PIPE	SPAN	WIDTH	WIDTH	SPAN	HEIGHT	HEIGHT	DIMENSION		BARS–U		BARS–V		BARS–W			TOTAL				H1		C.Y/	TO		
D	A	B	C	G	MIN. H	H^2	E	F1	NO	LENGTH	NO	LENGTH	NO	LENGTH H		LBS.	TOP SLAB	FLOOR	TOTAL	CU.YDS	PER FT HT	FT HT	FT HT	C.M.	R.C.
12"	3'–0"	2'–2"	–	–	2'–4"	–	–	–	–	–	–	–	–	–		–	–	0.281	0.281	0.748	0.321	0.321	–	0.0198	0.052
15"	3'–0"	2'–2"	–	–	2'–6"	–	–	–	–	–	–	–	–	–		–	–	0.281	0.281	0.802	ABOVE	0.321	–	0.0308	0.047
18"			–	–	2'–10"	–	–	–	–	–	–	–	–	–		–	–	0.281	0.281	0.909	MIN.H1	0.321	–	0.0442	0.065
24"		–	–		3'–4"	–	–	–	–	–	–	–	–	–			–	0.281	0.281	1.070		0.321		0.0784	0.113
30"			3'–4"	–	3'–2"	VA	1'–10"	4'–4"	4	1'–6"	3	4'–1"	3	4'–1"		45	0.147	0.374	0.521	1.305		0.378	0.108	0.1224	0.170
36"			3'–10"	–	3'–8"	RI	2'–4"	4'–4"	4	2'–0"	4	4'–1"	3	4'–1"		49	0.187	0.415	0.602	1.586	0.321	0.403	0.108	0.1760	0.238
42"		–		4'–5"	4'–4"	AB	2'–1"	3'–6"	4	1'–9"	3	3'–3"	3	3'–3"		38	0.135	0.373	0.508	1.811	H^2	0.391	0.117	0.2400	0.323
48"		–		5'–0"	4'–10"	LE	2'–8"	3'–6"	4	2'–6"	4	3'–3"	3	3'–3"		40	0.173	0.410	0.583	2.147		0.420	0.117	0.3131	0.422
54"	3'–0"	2'–2"	–	5'–7"	5'–4"		3'–3"	3'–6"	4	3'–0"	6	3'–3"	3	3'–3"		48	0.211	0.448	0.659	2.511		0.449	0.117	0.3958	0.535

DRAWN BY:
DESIGNED BY:
DATE APPROVED:
APPROVED BY:
REV. NO.
STD. NO. 4.14B

- The pipe shall be corrugated exterior/smooth interior pipe (Type S), conforming to the requirements of AASHTO Specifications M294 (latest edition) for Corrugated Polyethylene Pipe.
- Bell and spigot joints shall be required on all pipe. Bells shall cover at least two full corrugations on each section of pipe. The bell and spigot joint shall have "O"–ring rubber gasket meeting ASTM F477 with the gasket factory installed, placed on the spigot end of the pipe. Pipe joints shall meet all requirements of AASHTO M294.
- All HDPE pipe installation shall be in accordance with the manufacturer's recommendations.
- Backfill material used to install HDPE pipe shall be Select Material, Class II–IV, as defined by Section 1016–3 of the NCDOT Standard Specifications for Roads and Structures. Upon submittal of written certification of material suitability by a licensed geotechnical engineer, NCDOT Class I select material may be used. All backfill shall be approved by the Town inspector prior to placement.
- No HDPE end treatments allowed. All end treatments should be reinforced concrete pipe or headwalls. Transitions from HDPE to concrete pipe shall be made with thepriate adapter.
- Minimum bury depth of 18" from the outside wall of the pipe. Maximum bury depth of 20' unless specific approval by the Town Engineer is obtained.

NO.	DATE	DESCRIPTION

REVISIONS

HDPE PIPE

TOWN OF GARNER, N.C.

DRAWN BY:	DESIGNED BY:	REV. NO.
DATE APPROVED:		
APPROVED BY:		STD. NO. 4.16

STATE OF NORTH CAROLINA
DEPT. OF TRANSPORTATION
DIVISION OF HIGHWAYS
RALEIGH, N.C.

1-12

ENGLISH STANDARD DRAWING FOR

CURB RAMP

PROPOSED CURB AND GUTTER

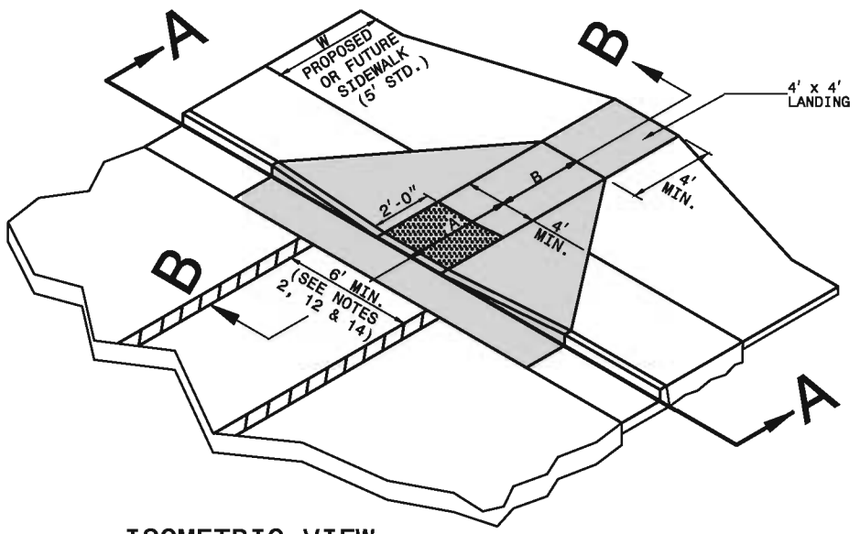

ISOMETRIC VIEW

PAY LIMITS FOR CURB RAMP

NOTES:
1. DETECTABLE WARNING DOMES WILL COVER 2'-0" LENGTH AND FULL WIDTH OF THE RAMP FLOOR AS SHOWN ON THE DETAILS.
2. DETECTABLE WARNING DOMES WILL CONTRAST VISIBILITY WITH ADJOINING SURFACE, EITHER LIGHT-ON-DARK, OR DARK-ON-LIGHT SEQUENCE COVERING THE ENTIRE RAMP.

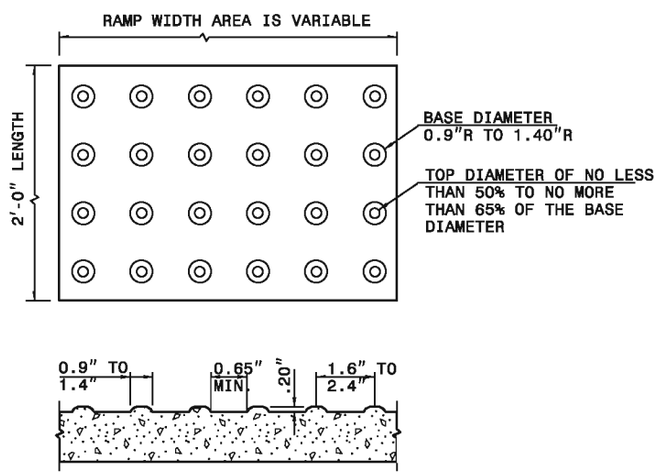

DETECTABLE WARNING DOMES

W	A	W+A+9"	X	B
5'	0.0'	5.8'	5.8'	5.0'*
6'	0.0'	6.8'	6.8'	6.0'**
7'	0.0'	7.8'	7.3'	6.5'**
8'	0.0'	8.8'	7.3'	6.5'**
5'	2.0'	7.8'	7.8'	5.0'
5'	2.5'	8.3'	8.1'	4.8'
5'	3.0'	8.8'	8.3'	4.4'
5'	3.5'	9.3'	8.4'	4.1'
5'	4.0'	9.8'	8.6'	3.8'
5'	4.5'	10.3'	8.7'	3.4'
5'	5.0'	10.8'	8.9'	3.1'

B = X-(A+9")
B = DISTANCE FROM FRONT EDGE OF SIDEWALK TO BACK POINT OF 12:1 (8.33%) SLOPE.
* BACK OF SIDEWALK DROP REQUIRED FOR ALL SIDEWALK SLOPES.
** BACK OF SIDEWALK DROP REQUIRED FOR SIDEWALK SLOPES 0.04.

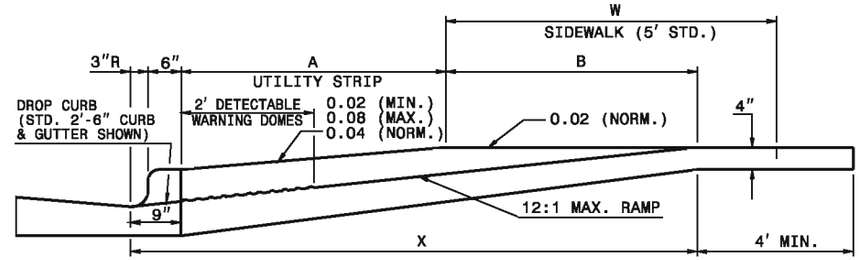

SECTION B-B

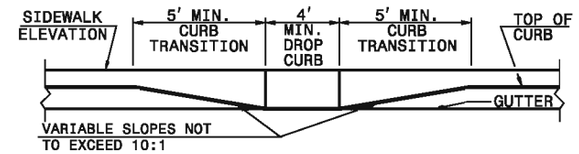

SECTION A-A

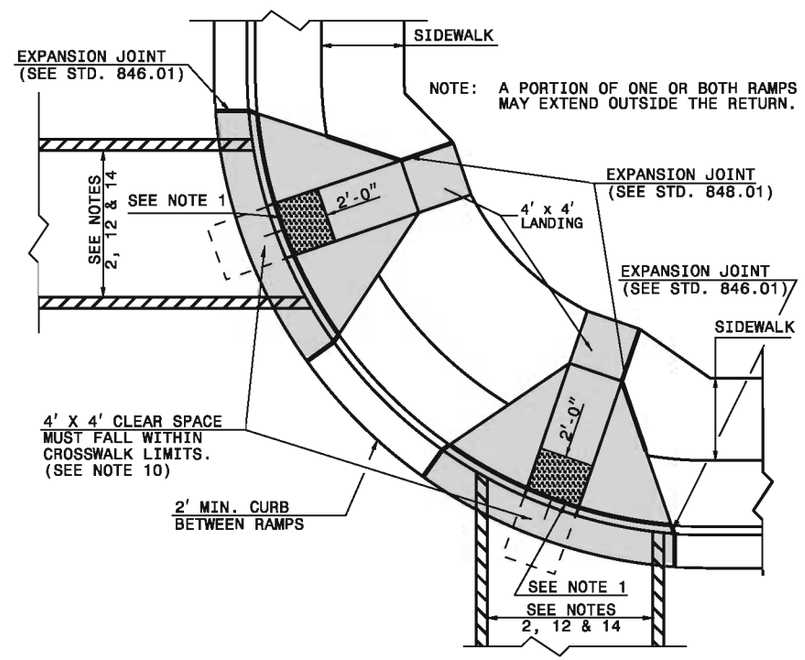

PLAN VIEW

DUAL RAMPS
ANY RADII
(4' MIN. FLOOR WIDTH)

STATE OF NORTH CAROLINA
DEPT. OF TRANSPORTATION
DIVISION OF HIGHWAYS
RALEIGH, N.C.

1-12

ENGLISH STANDARD DRAWING FOR

CURB RAMP

PROPOSED CURB AND GUTTER

SHEET 1 OF 3

848.05

SHEET 1 OF 3

848.05

STATE OF
NORTH CAROLINA
DEPT. OF TRANSPORTATION
DIVISION OF HIGHWAYS
RALEIGH, N.C.

1-12

ENGLISH STANDARD DRAWING FOR

CURB RAMP

PROPOSED CURB AND GUTTER

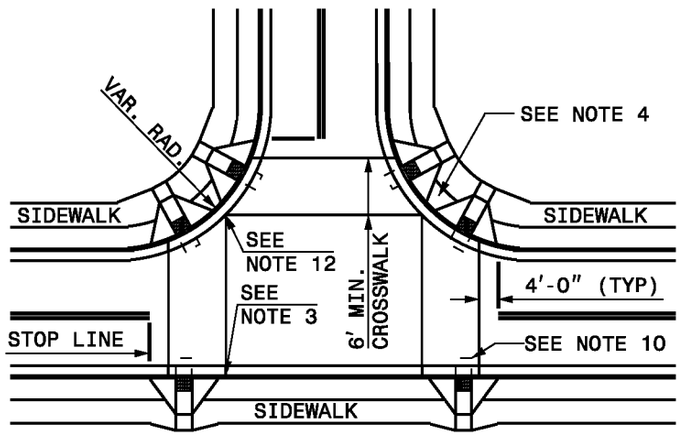

DETAIL SHOWING TYPICAL LOCATION OF CURB RAMPS, PEDESTRIAN CROSSWALKS AND STOP LINES FOR TEE INTERSECTIONS

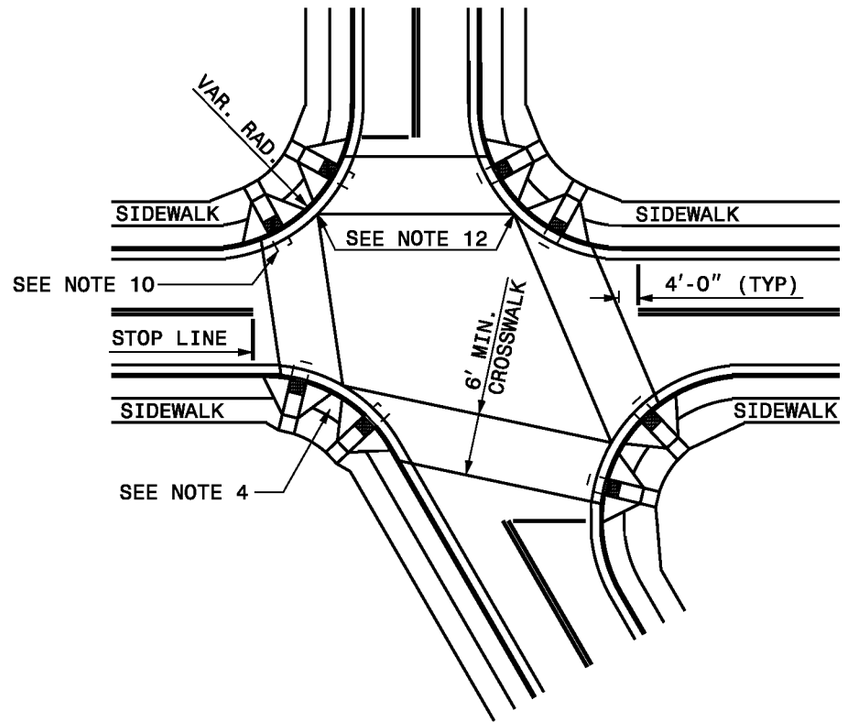

DETAIL SHOWING TYPICAL LOCATION OF CURB RAMPS, PEDESTRIAN CROSSWALKS AND STOP LINES

ROADWAY
PLAN SYMBOL
CR
FOR PROPOSED
CURB RAMP

PROPOSED CURB RAMP W/ LANDING

PROPOSED OR FUTURE SIDEWALK

ALLOWABLE LOCATIONS

DUAL RAMP RADII.....ANY

SHEET 2 OF 3

848.05

STATE OF
NORTH CAROLINA
DEPT. OF TRANSPORTATION
DIVISION OF HIGHWAYS
RALEIGH, N.C.

1-12

ENGLISH STANDARD DRAWING FOR

CURB RAMP

PROPOSED CURB AND GUTTER

SHEET 2 OF 3

848.05

STATE OF
NORTH CAROLINA
DEPT. OF TRANSPORTATION
DIVISION OF HIGHWAYS
RALEIGH, N.C.

1-12

ENGLISH STANDARD DRAWING FOR

CURB RAMPS

NOTES

NOTES:

1. CONSTRUCT THE RAMP SURFACE TO BE STABLE, FIRM, AND SLIP RESISTANT. CONSTRUCT THE CURB RAMP TYPE AS SHOWN IN THE PAVEMENT MARKING PLANS OR AS DIRECTED BY THE ENGINEER.
2. LOCATE CURB RAMPS AND PLACE PEDESTRIAN CROSSWALK MARKINGS AS SHOWN IN THE PAVEMENT MARKING PLANS. WHEN FIELD ADJUSTMENTS REQUIRE MOVING CURB RAMPS OR MARKINGS AS SHOWN, CONTACT THE SIGNING AND DELINEATION UNIT OR LOCATE AS DIRECTED BY THE ENGINEER.
3. COORDINATE THE CURB RAMP AND THE PEDESTRIAN CROSSWALK MARKINGS SO A 4′x4′ CLEAR SPACE AT THE BASE OF THE CURB RAMP WILL FALL WITHIN THE PEDESTRIAN CROSSWALK LINES.
4. SET BACK DISTANCE FROM INSIDE CROSSWALK MARKING TO NEAREST EDGE OF TRAVEL LANE IS 4′ MINIMUM.
5. REFER TO THE PAVEMENT MARKING PLANS FOR STOP BAR LOCATIONS AT SIGNALIZED INTERSECTIONS. IF A PAVEMENT MARKING PLAN IS NOT PROVIDED, CONTACT THE SIGNAL DESIGN SECTION FOR THE STOP BAR LOCATIONS OR LOCATE AS DIRECTED BY THE ENGINEER.
6. TERMINATE PARKING A MINIMUM OF 20′ BACK OF A PEDESTRIAN CROSSWALK.
7. CONSTRUCT CURB RAMPS A MINIMUM OF 4′ WIDE.
8. CONSTRUCT THE RUNNING SLOPE OF THE RAMP 8.33% MAXIMUM.
9. ALLOWABLE CROSS SLOPE ON SIDEWALKS AND CURB RAMPS WILL BE 2% MAXIMUM.
10. CONSTRUCT THE SIDE FLARE SLOPE A MAXIMUM OF 10% MEASURED ALONG THE CURB LINE.
11. CONSTRUCT THE COUNTER SLOPE OF THE GUTTER OR STREET AT THE BASE OF THE CURB RAMP A MAXIMUM OF 5% AND MAINTAIN A SMOOTH TRANSITION.
12. CONSTRUCT LANDINGS FOR SIDEWALK A MINIMUM OF 4′x4′ WITH A MAXIMUM SLOPE OF 2% IN ANY DIRECTION. CONSTRUCT LANDINGS FOR MEDIAN ISLANDS A MINIMUM OF 5′x5′ WITH A MAXIMUM SLOPE OF 2% IN ANY DIRECTION.
13. TO USE A MEDIAN ISLAND AS A PEDESTRIAN REFUGE AREA, MEDIAN ISLANDS WILL BE A MINIMUM OF 6′ WIDE. CONSTRUCT MEDIAN ISLANDS TO PROVIDE PASSAGE OVER OR THROUGHT THE ISLAND.
14. SMALL CHANNELIZATION ISLANDS THAT CAN NOT PROVIDE A 5′X5′ LANDING AT THE TOP OF A RAMPS, WILL BE CUT THROUGH LEVEL WITH THE SURFACE STREET.
15. CURB RAMPS WITH RETURNED CURBS MAY BE USED ONLY WHERE PEDESTRIANS WOULD NOT NORMALLY WALK ACROSS THE RAMP. THE ADJACENT SURFACE IS PLANTING OR OTHER NON-WALKING SURFACE OR THE SIDE APPROACH IS SUBSTANTIALLY OBSTRUCTED.
16. PLACE A ½″ EXPANSION JOINT WHERE THE CONCRETE CURB RAMP JOINS THE CURB AS SHOWN IN ROADWAY STANDARD DRAWING 848.01
17. PLACE ALL PEDESTRIAN PUSH BUTTON ACTUATORS AND CROSSING SIGNALS AS SHOWN IN THE PLANS OR AS SHOWN IN THE MUTCD.
18. CURB RAMPS THROUGH MEDIAN ISLANDS, SINGLE RAMPS AT DUAL CROSSWALKS OR LIMITED R/W SITUATIONS, WILL BE HANDLED BY SPECIAL DETAILS. CONTACT THE CONTRACT STANDARDS AND DEVELOPMENT UNIT FOR THE DETAILS OR FOR A SPECIAL DESIGN.

STATE OF
NORTH CAROLINA
DEPT. OF TRANSPORTATION
DIVISION OF HIGHWAYS
RALEIGH, N.C.

1-12

ENGLISH STANDARD DRAWING FOR

CURB RAMPS

NOTES

SHEET 3 OF 3
848.05

STATE OF NORTH CAROLINA
DEPT. OF TRANSPORTATION
DIVISION OF HIGHWAYS
RALEIGH, N.C.

1-12

ENGLISH STANDARD DRAWING FOR

CURB RAMP

EXISTING CURB AND GUTTER

CURB RAMP AND EXISTING SIDEWALK WITH GRASS STRIP

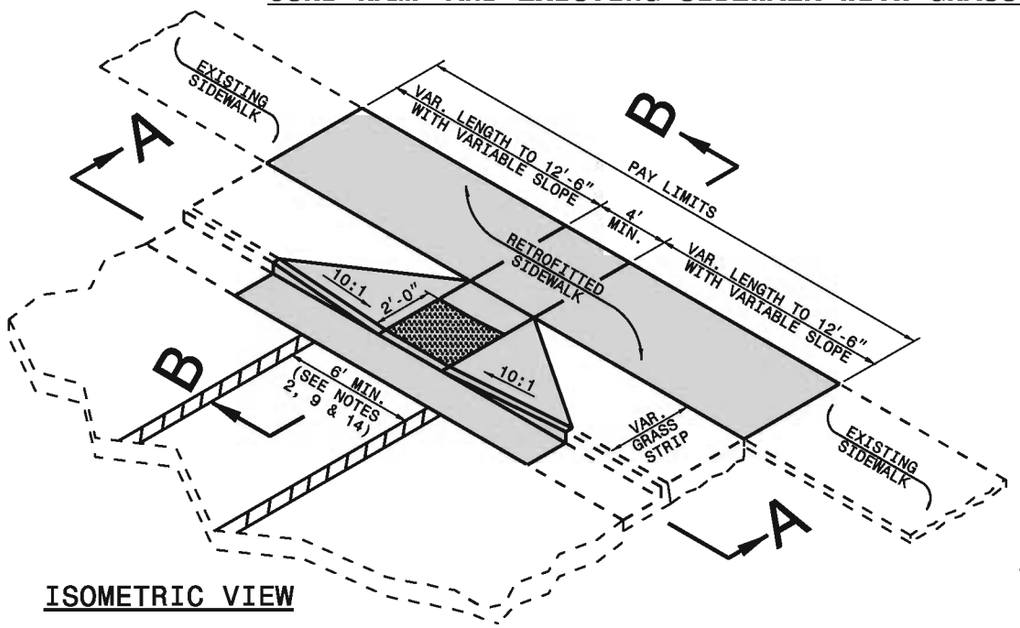

ISOMETRIC VIEW

PAY LIMITS OF CURB RAMP

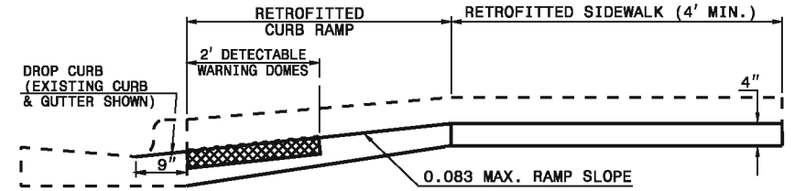

SECTION B-B

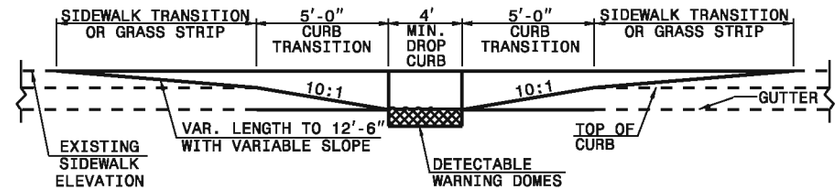

SECTION A-A

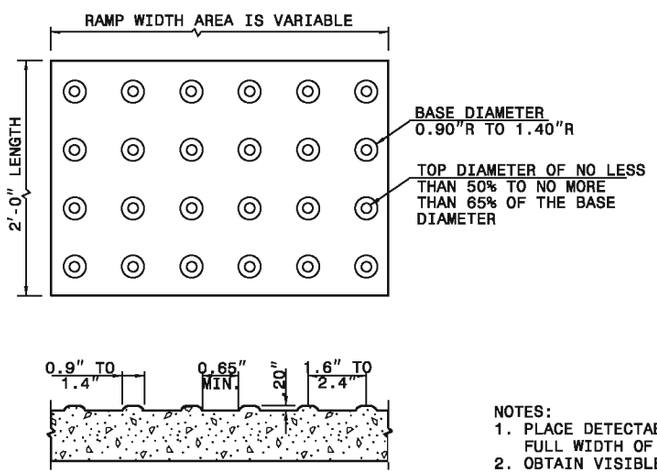

DETECTABLE WARNING DOMES

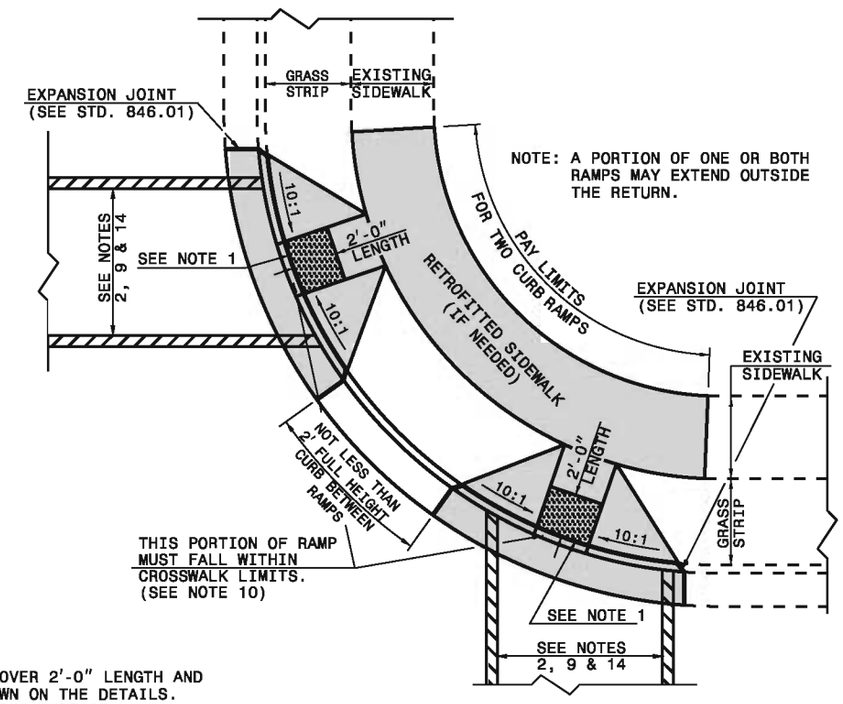

PLAN VIEW

DUAL RAMPS
ANY RADII
(40" MIN. FLOOR WIDTH)

NOTES:
1. PLACE DETECTABLE WARNING DOMES TO COVER 2'-0" LENGTH AND FULL WIDTH OF THE RAMP FLOOR AS SHOWN ON THE DETAILS.
2. OBTAIN VISIBLE CONTRAST WITH ADJOINING SURFACE, EITHER LIGHT-ON-DARK, OR DARK-ON-LIGHT SEQUENCE COVERING THE ENTIRE RAMP.

SHEET 1 OF 5

848.06

STATE OF NORTH CAROLINA
DEPT. OF TRANSPORTATION
DIVISION OF HIGHWAYS
RALEIGH, N.C.

1-12

ENGLISH STANDARD DRAWING FOR

CURB RAMP

EXISTING CURB AND GUTTER

SHEET 1 OF 5

848.06

STATE OF NORTH CAROLINA
DEPT. OF TRANSPORTATION
DIVISION OF HIGHWAYS
RALEIGH, N.C.

1-12

ENGLISH STANDARD DRAWING FOR

CURB RAMP

EXISTING CURB AND GUTTER

SHEET 2 OF 5

848.06

CURB RAMPS AND EXISTING SIDEWALK ADJACENT TO CURB

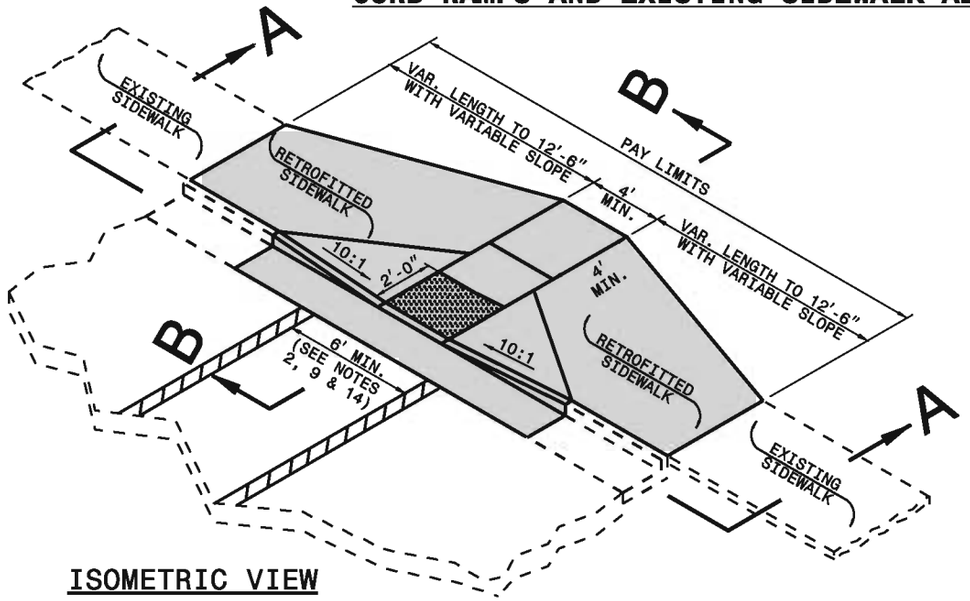

ISOMETRIC VIEW

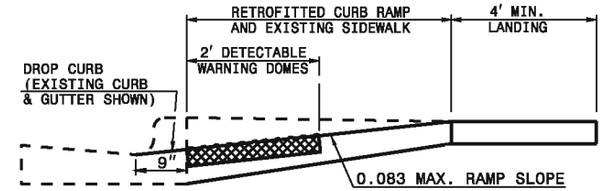

SECTION B-B

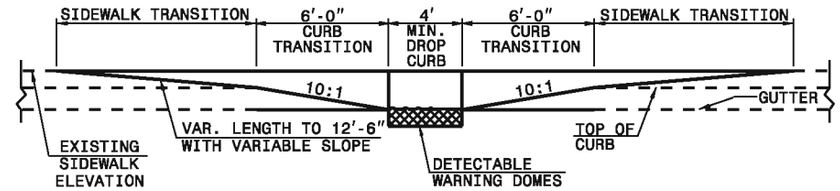

SECTION A-A

PAY LIMITS OF CURB RAMP

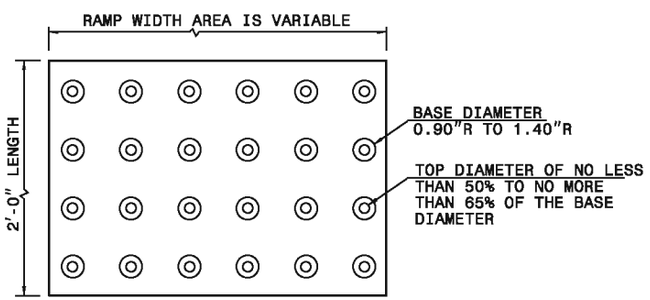

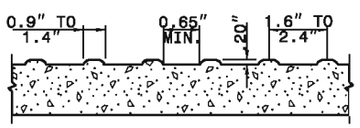

DETECTABLE WARNING DOMES

NOTES:
1. PLACE DETECTABLE WARNING DOMES TO COVER 2'-0" LENGTH AND FULL WIDTH OF THE RAMP FLOOR AS SHOWN ON THE DETAILS.
2. OBTAIN VISIBLE CONTRAST WITH ADJOINING SURFACE, EITHER LIGHT-ON-DARK, OR DARK-ON-LIGHT SEQUENCE COVERING THE ENTIRE RAMP.

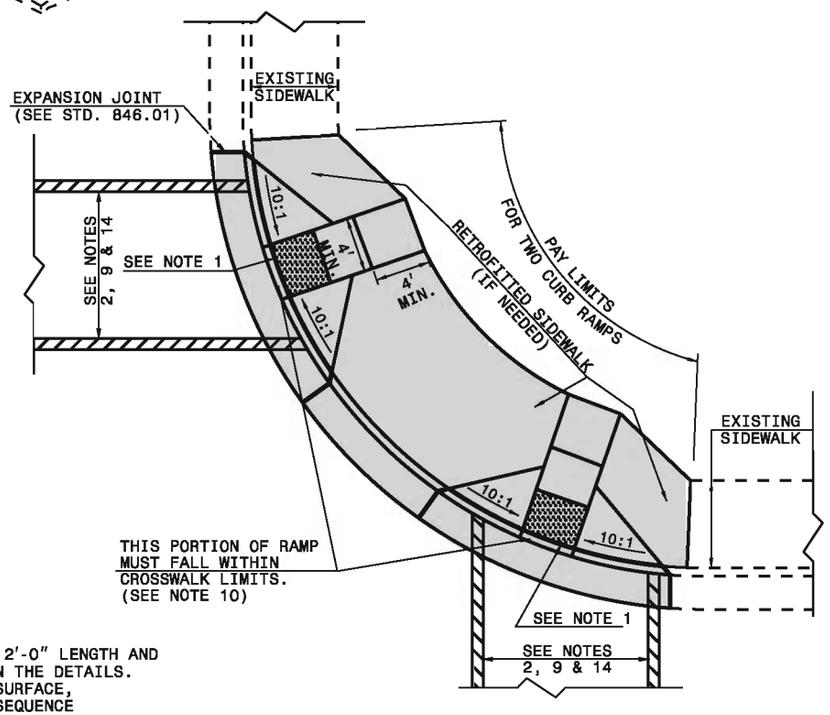

PLAN VIEW

DUAL RAMPS
ANY RADII
(40" MIN. FLOOR WIDTH)

STATE OF NORTH CAROLINA
DEPT. OF TRANSPORTATION
DIVISION OF HIGHWAYS
RALEIGH, N.C.

1-12

ENGLISH STANDARD DRAWING FOR

CURB RAMP

EXISTING CURB AND GUTTER

SHEET 2 OF 5

848.06

STATE OF
NORTH CAROLINA
DEPT. OF TRANSPORTATION
DIVISION OF HIGHWAYS
RALEIGH, N.C.

1-12

ENGLISH STANDARD DRAWING FOR

CURB RAMP

EXISTING CURB AND GUTTER

SHEET 3 OF 5

848.06

RETROFITTING DETECTABLE WARNING DOMES ONTO EXISTING CURB RAMP

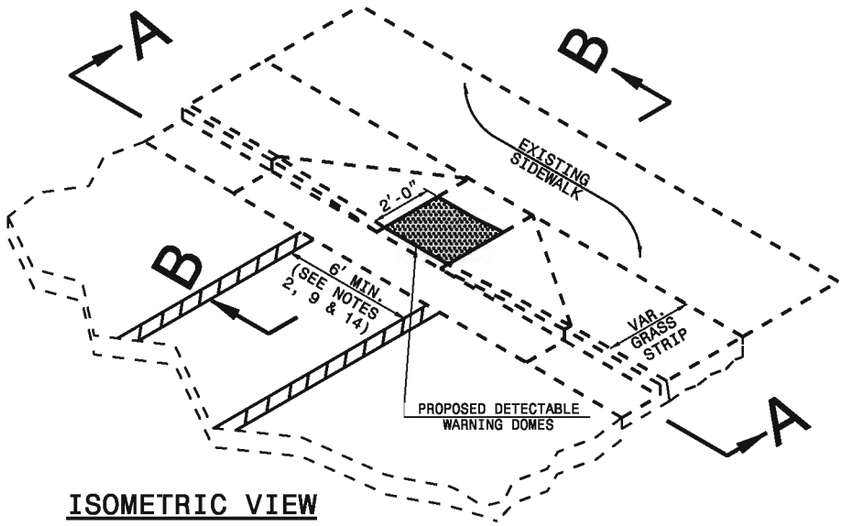

ISOMETRIC VIEW

PAY LIMITS OF RETROFIT CURB RAMP

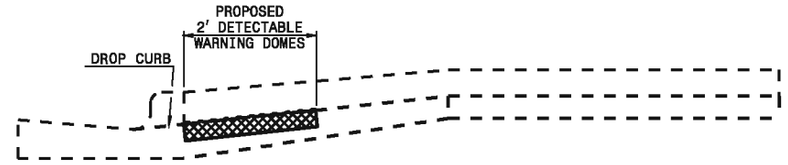

SECTION B-B

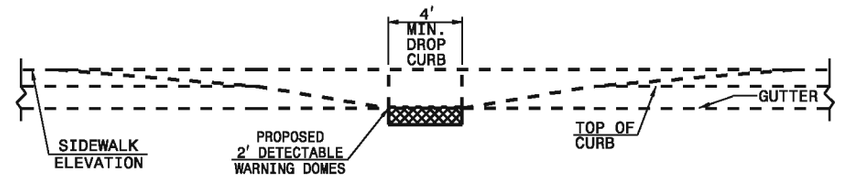

SECTION A-A

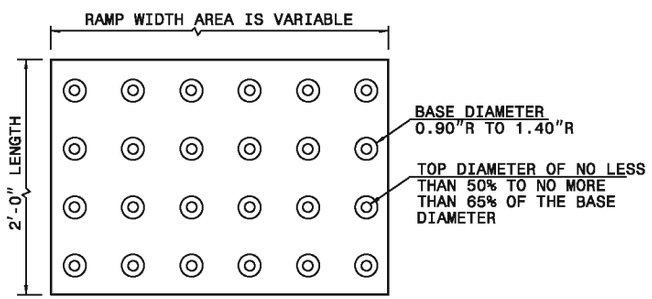

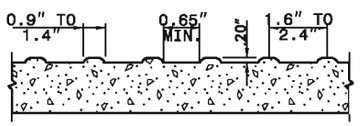

NOTES:
1. PLACE DETECTABLE WARNING DOMES TO COVER 2'-0" LENGTH AND FULL WIDTH OF THE RAMP FLOOR AS SHOWN ON THE DETAILS.
2. OBTAIN VISIBLE CONTRAST WITH ADJOINING SURFACE, EITHER LIGHT-ON-DARK, OR DARK-ON-LIGHT SEQUENCE COVERING THE ENTIRE RAMP.

DETECTABLE WARNING DOMES

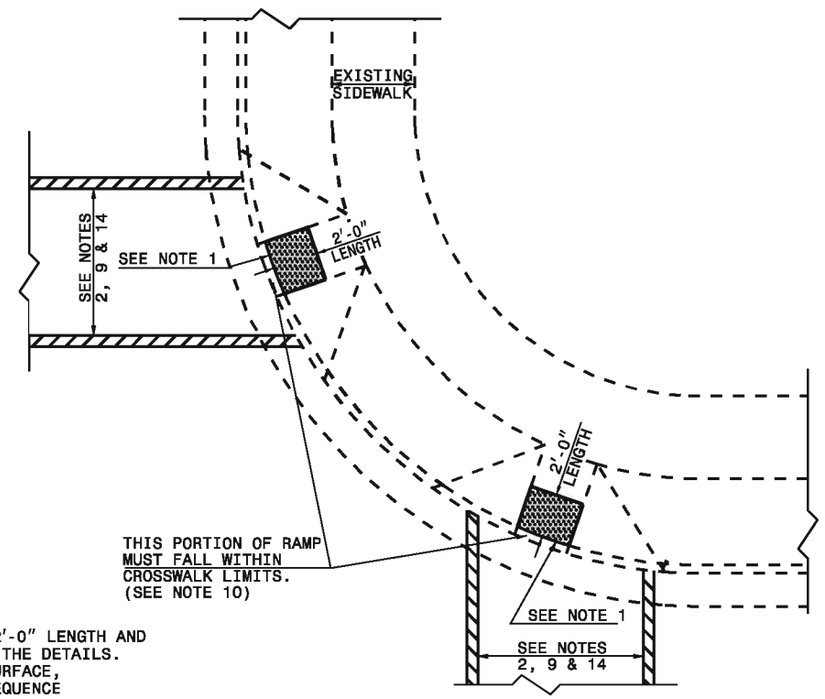

PLAN VIEW

DUAL RAMPS
ANY RADII
(40" MIN. FLOOR WIDTH)

STATE OF
NORTH CAROLINA
DEPT. OF TRANSPORTATION
DIVISION OF HIGHWAYS
RALEIGH, N.C.

1-12

ENGLISH STANDARD DRAWING FOR

CURB RAMP

EXISTING CURB AND GUTTER

SHEET 3 OF 5

848.06

STATE OF
NORTH CAROLINA
DEPT. OF TRANSPORTATION
DIVISION OF HIGHWAYS
RALEIGH, N.C.

1-12

ENGLISH STANDARD DRAWING FOR

CURB RAMP

EXISTING CURB AND GUTTER

SHEET 4 OF 5

848.06

CURB RAMPS AND EXISTING SIDEWALK

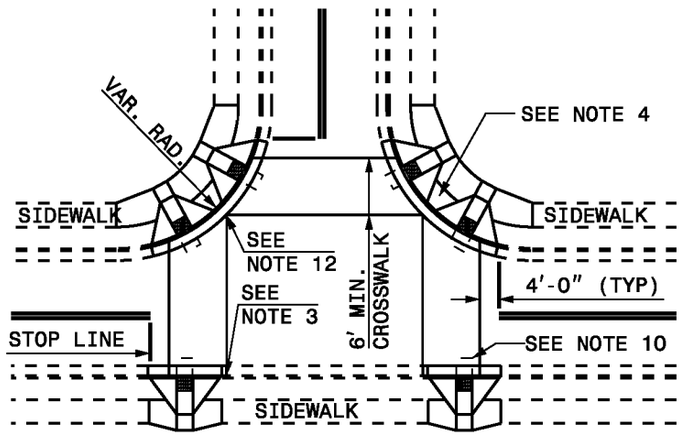

DETAIL SHOWING TYPICAL LOCATION OF CURB RAMPS, PEDESTRIAN CROSSWALKS AND STOP LINES FOR TEE INTERSECTIONS

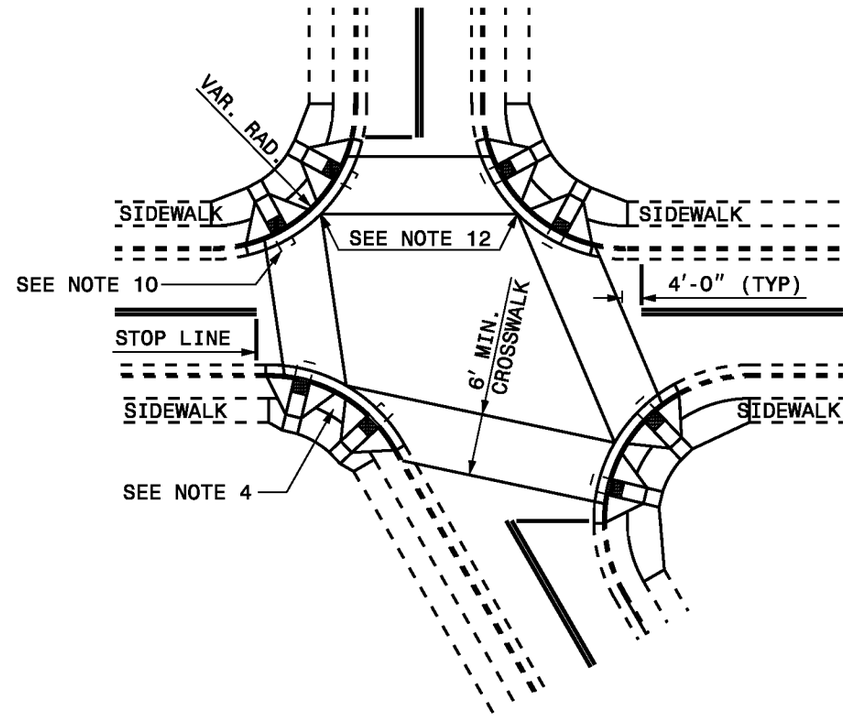

DETAIL SHOWING TYPICAL LOCATION OF CURB RAMPS, PEDESTRIAN CROSSWALKS AND STOP LINES

RESURFACING PROJECTS

PROPOSED CURB RAMP W/ LANDING FOR RESURFACING PROJECTS

EXISTING SIDEWALK

ALLOWABLE LOCATIONS

DUAL RAMP RADII.....ANY

STATE OF
NORTH CAROLINA
DEPT. OF TRANSPORTATION
DIVISION OF HIGHWAYS
RALEIGH, N.C.

1-12

ENGLISH STANDARD DRAWING FOR

CURB RAMP

EXISTING CURB AND GUTTER

SHEET 4 OF 5

848.06

STATE OF NORTH CAROLINA
DEPT. OF TRANSPORTATION
DIVISION OF HIGHWAYS
RALEIGH, N.C.

1-12

ENGLISH STANDARD DRAWING FOR

CURB RAMP

EXISTING CURB AND GUTTER

SHEET 5 OF 5

848.06

CURB RAMP AND EXISTING SIDEWALK

NOTES:

1. CONSTRUCT THE RAMP SURFACE TO BE STABLE, FIRM, AND SLIP RESISTANT. CONSTRUCT THE CURB RAMP TYPE AS SHOWN IN THE PAVEMENT MARKING PLANS OR AS DIRECTED BY THE ENGINEER.
2. LOCATE CURB RAMPS AND PLACE PEDESTRIAN CROSSWALK MARKINGS AS SHOWN IN THE PAVEMENT MARKING PLANS. WHEN FIELD ADJUSTMENTS REQUIRE MOVING CURB RAMPS OR MARKINGS AS SHOWN, CONTACT THE SIGNING AND DELINEATION UNIT OR LOCATE AS DIRECTED BY THE ENGINEER.
3. COORDINATE THE CURB RAMP AND THE PEDESTRIAN CROSSWALK MARKINGS SO A 4′x4′ CLEAR SPACE AT THE BASE OF THE CURB RAMP WILL FALL WITHIN THE PEDESTRIAN CROSSWALK LINES.
4. SET BACK DISTANCE FROM INSIDE CROSSWALK MARKING TO NEAREST EDGE OF TRAVEL LANE IS 4′ MINIMUM.
5. REFER TO THE PAVEMENT MARKING PLANS FOR STOP BAR LOCATIONS AT SIGNALIZED INTERSECTIONS. IF A PAVEMENT MARKING PLAN IS NOT PROVIDED, CONTACT THE SIGNAL DESIGN SECTION FOR THE STOP BAR LOCATIONS OR LOCATE AS DIRECTED BY THE ENGINEER.
6. TERMINATE PARKING A MINIMUM OF 20′ BACK OF A PEDESTRIAN CROSSWALK.
7. CONSTRUCT CURB RAMPS A MINIMUM OF 4′ WIDE.
8. CONSTRUCT THE RUNNING SLOPE OF THE RAMP 8.33% MAXIMUM.
9. ALLOWABLE CROSS SLOPE ON SIDEWALKS AND CURB RAMPS WILL BE 2% MAXIMUM.
10. CONSTRUCT THE SIDE FLARE SLOPE A MAXIMUM OF 10% MEASURED ALONG THE CURB LINE.
11. CONSTRUCT THE COUNTER SLOPE OF THE GUTTER OR STREET AT THE BASE OF THE CURB RAMP A MAXIMUM OF 5% AND MAINTAIN A SMOOTH TRANSITION.
12. CONSTRUCT LANDINGS FOR SIDEWALK A MINIMUM OF 4′x4′ WITH A MAXIMUM SLOPE OF 2% IN ANY DIRECTION. CONSTRUCT LANDINGS FOR MEDIAN ISLANDS A MINIMUM OF 5′x5′ WITH A MAXIMUM SLOPE OF 2% IN ANY DIRECTION.
13. TO USE A MEDIAN ISLAND AS A PEDESTRIAN REFUGE AREA, MEDIAN ISLANDS WILL BE A MINIMUM OF 6′ WIDE. CONSTRUCT MEDIAN ISLANDS TO PROVIDE PASSAGE OVER OR THROUGHT THE ISLAND.
14. SMALL CHANNELIZATION ISLANDS THAT CAN NOT PROVIDE A 5′X5′ LANDING AT THE TOP OF A RAMPS, WILL BE CUT THROUGH LEVEL WITH THE SURFACE STREET.
15. CURB RAMPS WITH RETURNED CURBS MAY BE USED ONLY WHERE PEDESTRIANS WOULD NOT NORMALLY WALK ACROSS THE RAMP. THE ADJACENT SURFACE IS PLANTING OR OTHER NON-WALKING SURFACE OR THE SIDE APPROACH IS SUBSTANTIALLY OBSTRUCTED.
16. PLACE A ½″ EXPANSION JOINT WHERE THE CONCRETE CURB RAMP JOINS THE CURB AS SHOWN IN ROADWAY STANDARD DRAWING 848.01
17. PLACE ALL PEDESTRIAN PUSH BUTTON ACTUATORS AND CROSSING SIGNALS AS SHOWN IN THE PLANS OR AS SHOWN IN THE MUTCD.
18. CURB RAMPS THROUGH MEDIAN ISLANDS, SINGLE RAMPS AT DUAL CROSSWALKS OR LIMITED R/W SITUATIONS, WILL BE HANDLED BY SPECIAL DETAILS. CONTACT THE CONTRACT STANDARDS AND DEVELOPMENT UNIT FOR THE DETAILS OR FOR A SPECIAL DESIGN.

STATE OF NORTH CAROLINA
DEPT. OF TRANSPORTATION
DIVISION OF HIGHWAYS
RALEIGH, N.C.

1-12

ENGLISH STANDARD DRAWING FOR

CURB RAMP

EXISTING CURB AND GUTTER

SHEET 5 OF 5

848.06

5/14/99

PROJECT REFERENCE NO.	SHEET NO.

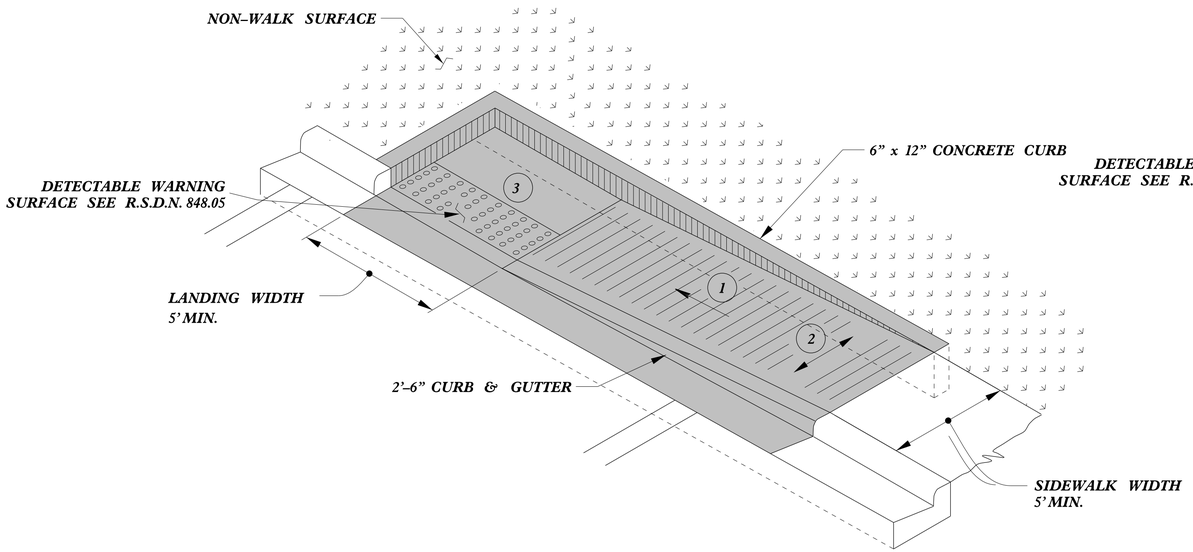

TYPE 1A

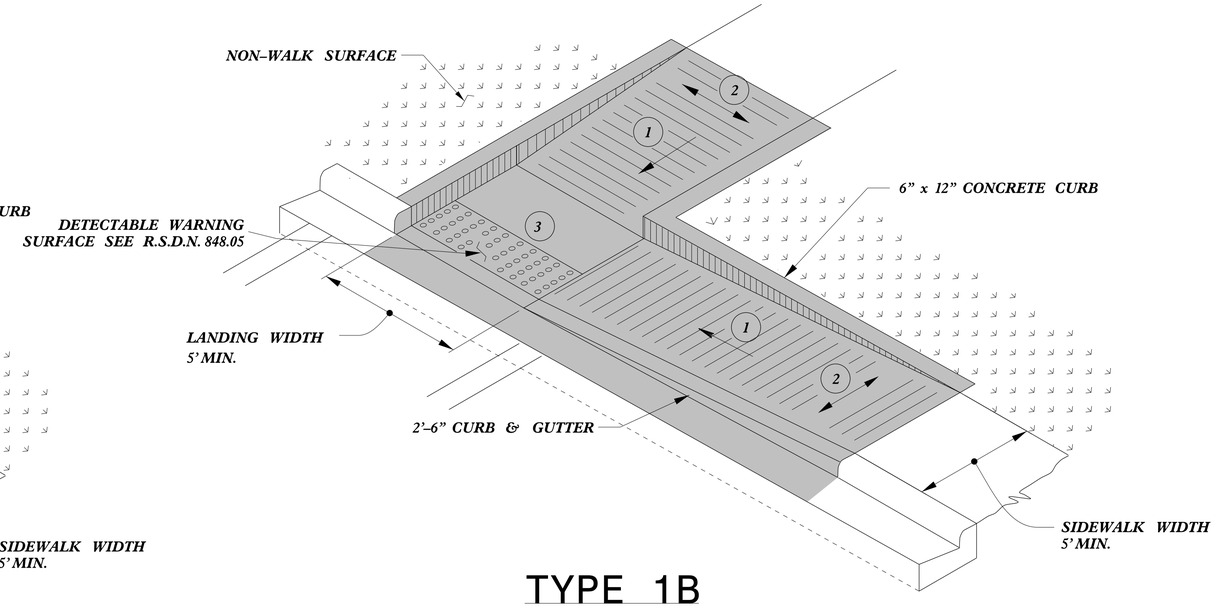

TYPE 1B

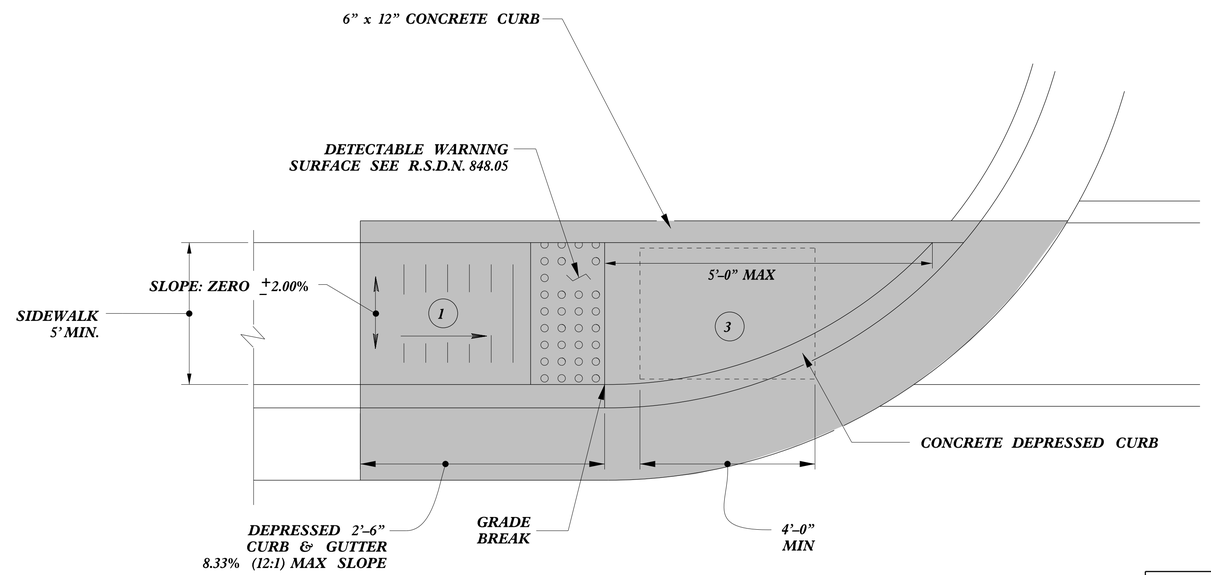

TYPE 1

PAY LIMITS FOR 1 CURB RAMP

1. 8.33% (12:1) MAX RAMP SLOPE
2. CROSS SLOPE: 2.00%
3. CURB RAMPS REQUIRE A (4'-0") MINIMUM LANDING WITH A MAXIMUM CROSS SLOPE AND LONGITUDINAL SLOPE OF 2.00% WHERE PEDESTRIANS PERFORM TURNING MANEUVERS. SLOPE TO DRAIN TO CURB.

REFER TO ROADWAY STANDARD DRAWING NUMBER 848.05 SHEET 3 OF 3 FOR ALL RAMP NOTES

NORTH CAROLINA PROFESSIONAL SEAL 022966 ENGINEER Joel S. Howerton

DOCUMENT NOT CONSIDERED FINAL UNLESS ALL SIGNATURES COMPLETED

CONTRACT STANDARDS AND DEVELOPMENT UNIT
Office 919-707-6950 FAX 919-250-4119

CURB RAMPS

Directional Ramps

ORIGINAL BY: J.S. HOWERTON DATE: 7/7/11
MODIFIED BY: DATE:
CHECKED BY: DATE:
FILE SPEC.: stds/2012CurbRamp/CurbRampDetails.dgn

$$$$SYSTEM$$$$
$$$$USERNAME$$$$ $$$$DGN$$$$

PROJECT REFERENCE NO.	SHEET NO.

PAY LIMITS FOR 2 OR 3 CURB RAMPS (CALCULATE BASED ON NUMBER OF SETS OF TRUNCATED DOMES)

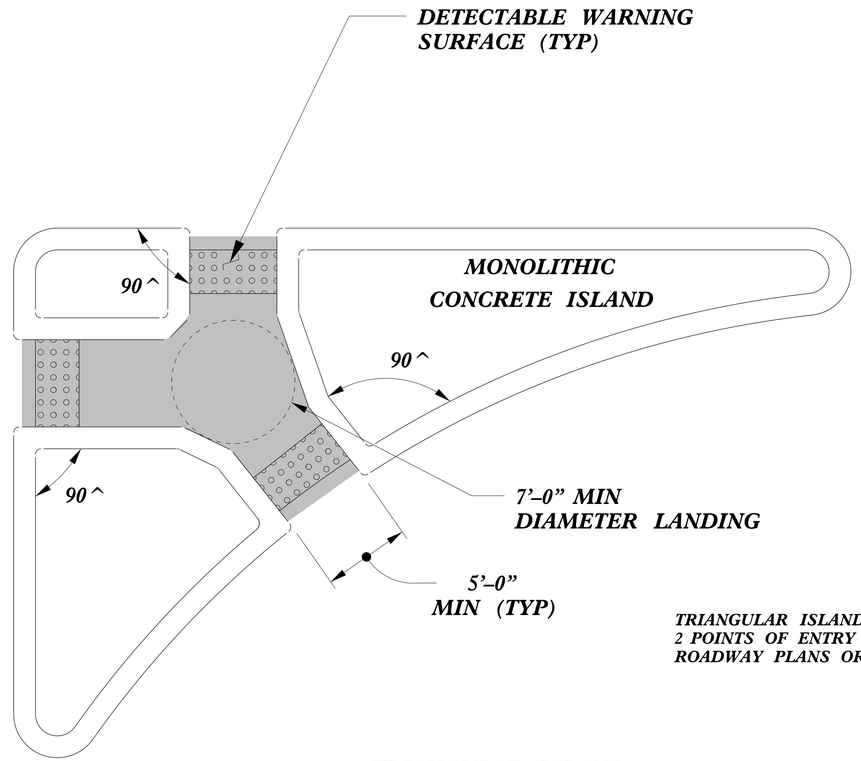

TRIANGULAR ISLANDS MAY BE CONSTRUCTED WITH ONLY 2 POINTS OF ENTRY AND EXIT AS SHOWN IN THE ROADWAY PLANS OR AS DIRECTED BY THE ENGINEER.

TRIANGULAR ISLAND WITH CUT THROUGH

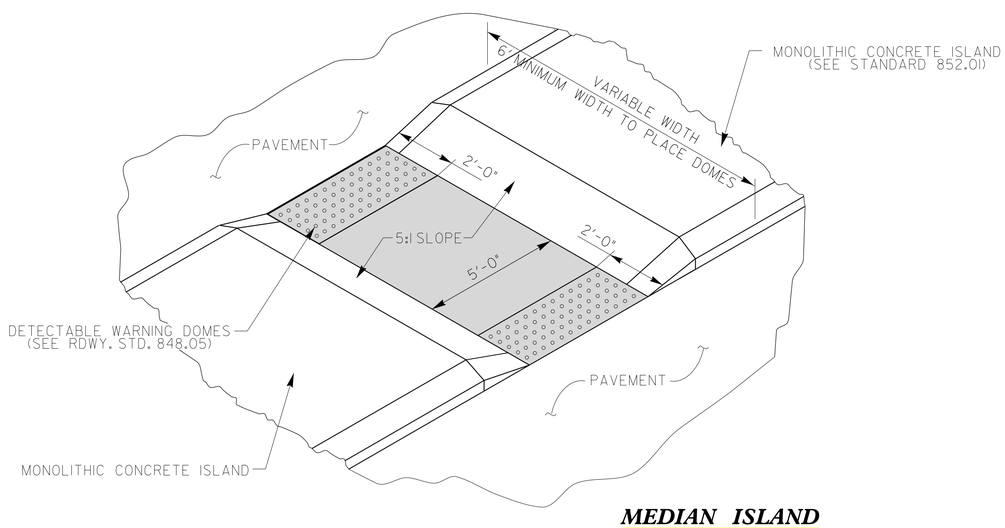

MEDIAN ISLAND WITH CUT THROUGH

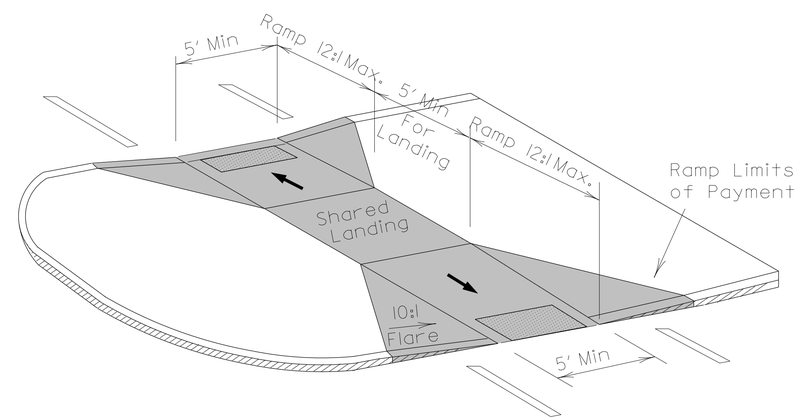

MEDIAN ISLAND CURB RAMPS

DOCUMENT NOT CONSIDERED FINAL UNLESS ALL SIGNATURES COMPLETED

NORTH CAROLINA PROFESSIONAL SEAL 022966 ENGINEER Joel S. Howerton

CONTRACT STANDARDS AND DEVELOPMENT UNIT
Office 919-707-6950 FAX 919-250-4119

CURB RAMPS

Median or Turn Lane Islands

ORIGINAL BY: J.S. HOWERTON DATE: 7/7/11
MODIFIED BY: DATE:
CHECKED BY: DATE:
FILE SPEC.: stds/2012CurbRamp/CurbRampDetails.dgn

5/14/99

$$$$$SYSTIME$$$$
$$$$$DGN$$$$$$$$$$$$$$$$
$$$$$USERNAME$$$$

5/14/99

PROJECT REFERENCE NO.	SHEET NO.

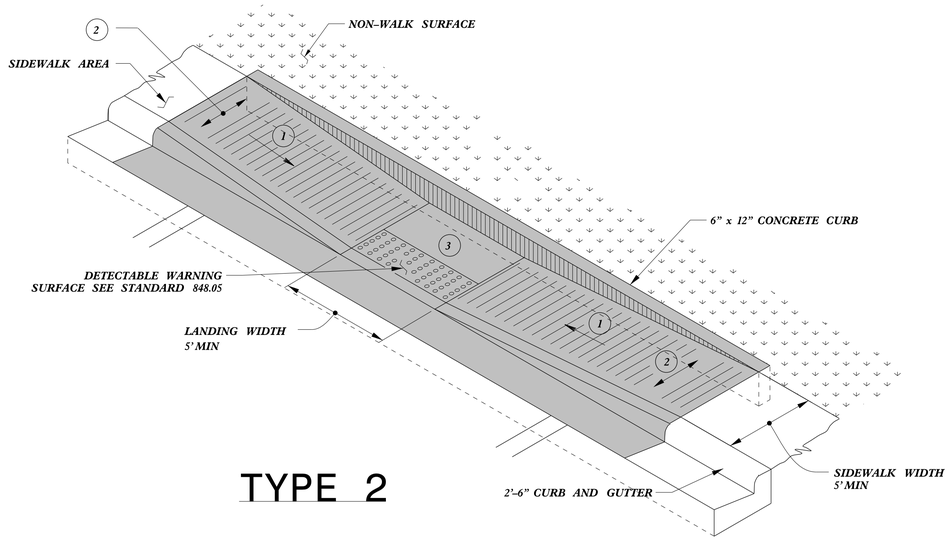

TYPE 2

PAY LIMITS FOR 1 CURB RAMP

1. 8.33% (12:1) MAX RAMP SLOPE
2. CROSS SLOPE: 2.00%
3. CURB RAMPS REQUIRE A (4'-0") MINIMUM LANDING WITH A MAXIMUM CROSS SLOPE AND LONGITUDINAL SLOPE OF 2.00% WHERE PEDESTRIANS PERFORM TURNING MANEUVERS. SLOPE TO DRAIN TO CURB.

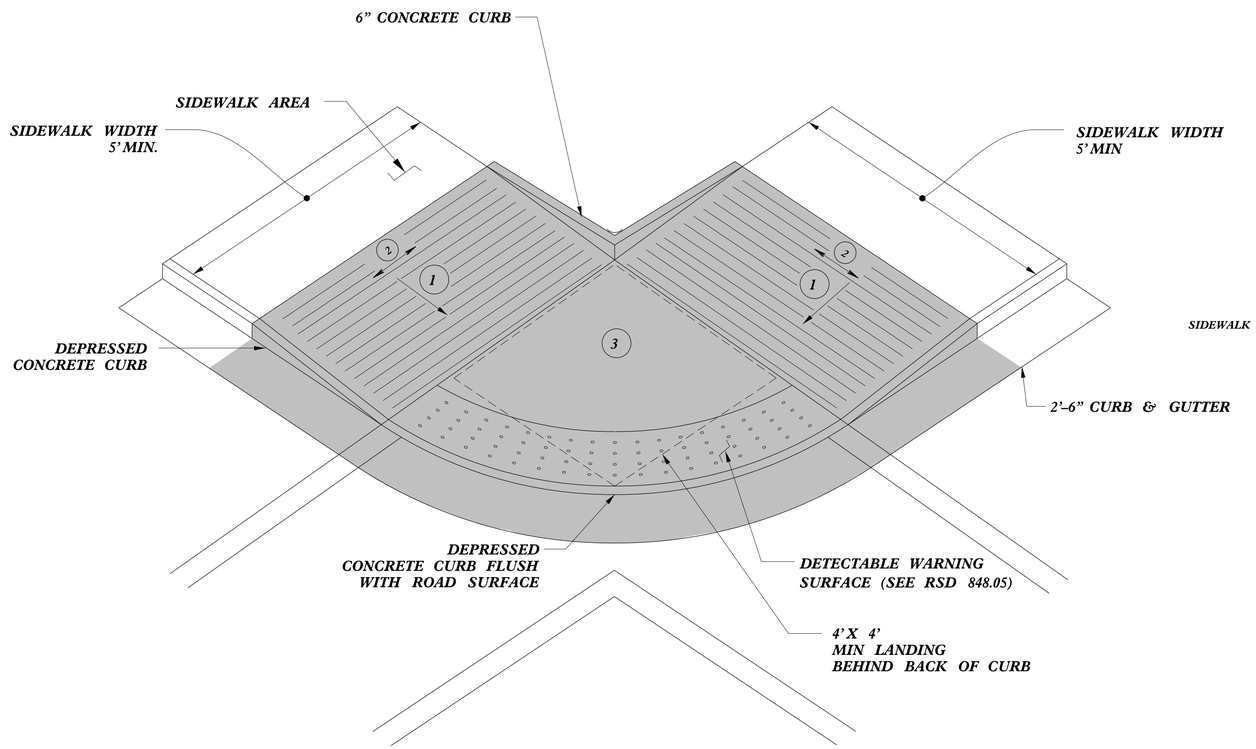

TYPE 2A

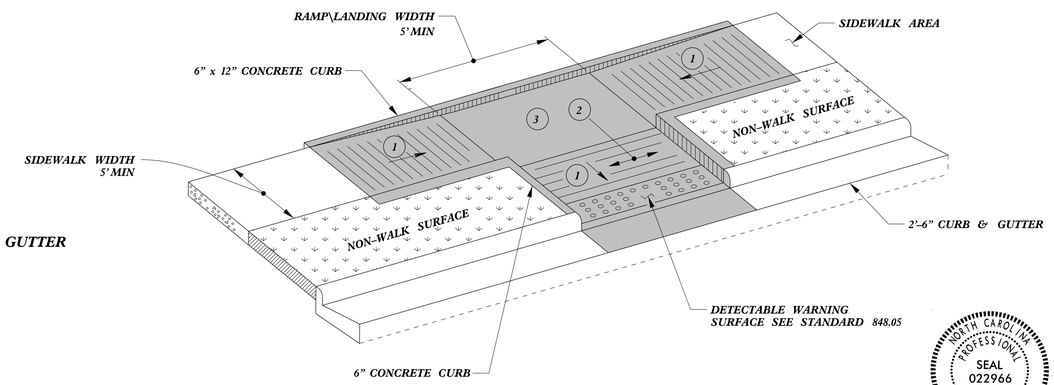

TYPE 3

NORTH CAROLINA PROFESSIONAL SEAL 022966 ENGINEER Joel S. Howerton

REFER TO ROADWAY STANDARD DRAWING NUMBER 848.05 SHEET 3 OF 3 FOR ALL RAMP NOTES

DOCUMENT NOT CONSIDERED FINAL UNLESS ALL SIGNATURES COMPLETED

CONTRACT STANDARDS AND DEVELOPMENT UNIT
Office 919-707-6950 FAX 919-250-4119

CURB RAMPS

Parallel Ramps

ORIGINAL BY: J.S. HOWERTON DATE: 7/7/11
MODIFIED BY: DATE:
CHECKED BY: DATE:
FILE SPEC.: stds/2012CurbRamp/CurbRampDetails.dgn

$$$$SYSTIME$$$$
$$$$SYSTIME$$$$
$$$$USERNAME$$$$
$$$$USERNAME$$$$

5/14/99

PROJECT REFERENCE NO.	SHEET NO.

PAY LIMITS FOR 2 CURB RAMPS

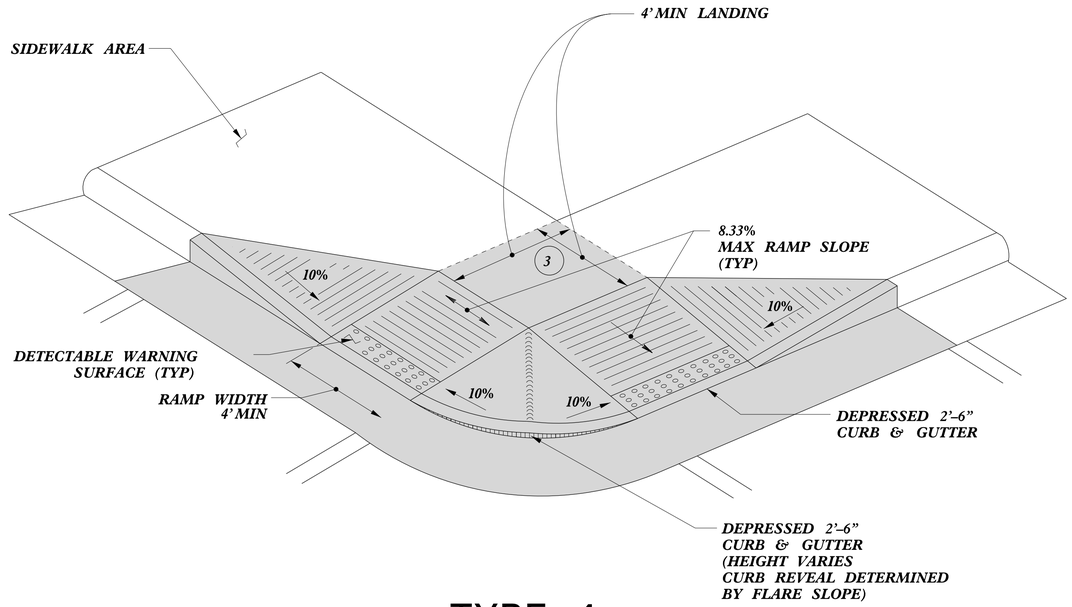

TYPE 4

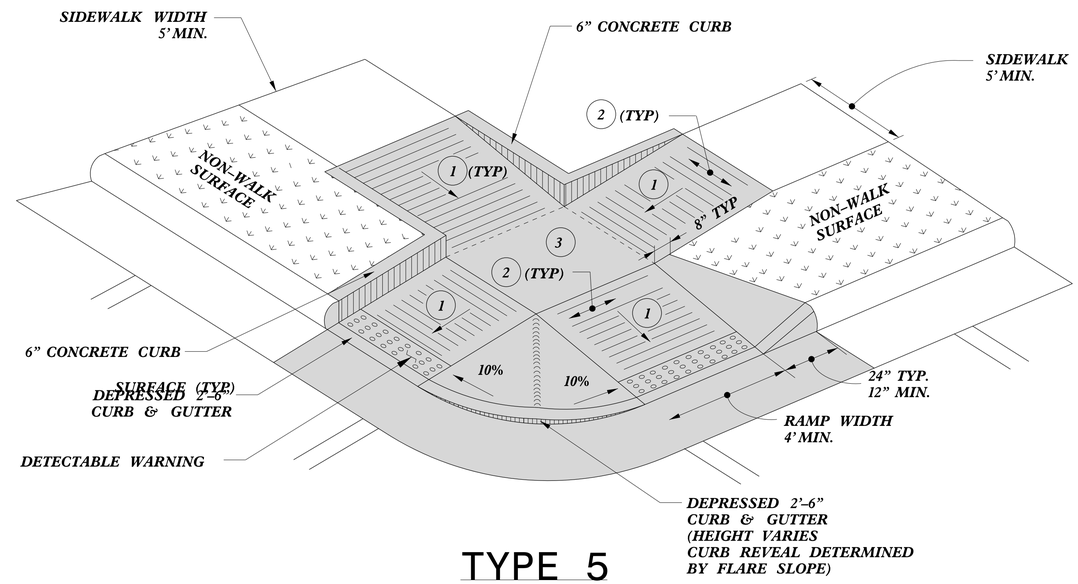

TYPE 5

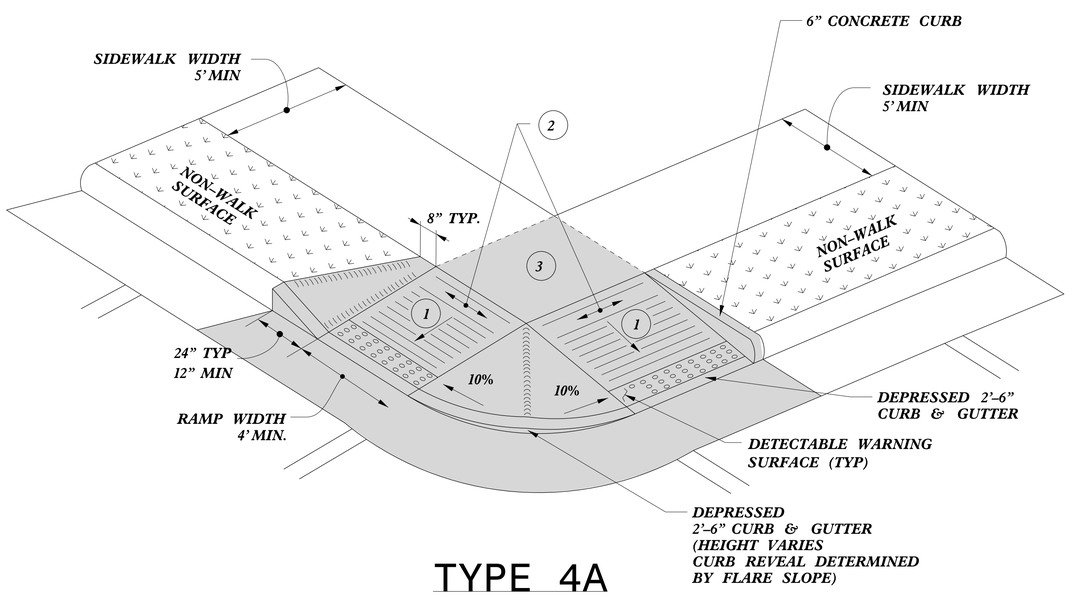

TYPE 4A

1. 8.33% (12:1) MAX RAMP SLOPE
2. CROSS SLOPE: 2.00%
3. CURB RAMPS REQUIRE A (4'-0") MINIMUM LANDING WITH A MAXIMUM CROSS SLOPE AND LONGITUDINAL SLOPE OF 2.00% WHERE PEDESTRIANS PERFORM TURNING MANEUVERS. SLOPE TO DRAIN TO CURB.

REFER TO ROADWAY STANDARD DRAWING NUMBER 848.05 SHEET 3 OF 3 FOR ALL RAMP NOTES

DOCUMENT NOT CONSIDERED FINAL UNLESS ALL SIGNATURES COMPLETED

CONTRACT STANDARDS AND DEVELOPMENT UNIT
Office 919-707-6950 FAX 919-250-4119

CURB RAMPS

Shared Landing

ORIGINAL BY: J.S. HOWERTON DATE: 7/7/11
MODIFIED BY: DATE:
CHECKED BY: DATE:
FILE SPEC. :stds/2012CurbRamp/CurbRampDetails.dgn

$$$$SYTIME$$$$
$$$$SIGN$$$$
$$$$USERNAME$$$$